SUNGROW
Clean power for all

System Manual

MV Station

MVS8960–LV/MVS9000–LV

MVS8960_9000-LV-SEN-Ver52-202407

All Rights Reserved

All Rights Reserved

No part of this document can be reproduced in any form or by any means without the prior written permission of Sungrow Power Supply Co., Ltd (hereinafter "SUNGROW").

Trademarks

SUNGROW and other SUNGROW trademarks used in this manual are owned by SUNGROW.

All other trademarks or registered trademarks mentioned in this manual are owned by their respective owners.

Software Licenses

- It is prohibited to use data contained in firmware or software developed by SUNGROW, in part or in full, for commercial purposes by any means.
- It is prohibited to perform reverse engineering, cracking, or any other operations that compromise the original program design of the software developed by SUNGROW.

About This Manual

This manual describes the identification and storage, mechanical installation, electrical connection, power up and shutdown, troubleshooting, and maintenance of the MV Station.

Target Group

This manual is for technical personnel who are responsible for the transport, installation and other operations of the MV Station. Only qualified personnel can perform the installation, maintenance and troubleshooting of the MV Station. Unauthorized persons should not perform any operation on the MV Station and should be away from the MV Station to avoid potential hazards. Qualified personnel are:

- Equipped with certain electrical wiring and mechanical knowledge and familiar with electrical and mechanical principle diagram.
- Familiar with the construction and working principle of the PV grid-connected power generation system; and familiar with the construction and working principle of the MV Station upstream and downstream equipment.
- Trained especially in the installation of electrical devices.
- Capable of coping with the dangerous and emergency situations during the installation and commissioning.
- Familiar with the country/regional standards and specifications.
- Familiar with this manual

How to Use This Manual

Please read this manual carefully before using the product and keep it properly at a place for easy access.

In order to provide customers with the best usage experience, the products and product manuals are always in the process of improvement and upgrade. If the manual received is slightly inconsistent with the product, it may be a result of product version upgrade, and the actual product shall prevail.

Contents of the manual may be updated and amended continuously, so it is possible that there may be some errors or slight inconsistency with the actual product. Please refer to the actual product purchased, and the latest manual can be obtained from **support.sungrowpower.com** or sales channels.

A large number of pictures are provided to help users better understand and use this manual. These pictures are used for illustration only and may not be an exact representation of the real product.

Symbol Explanations

To ensure the safety of the users and their properties when they use the product and to make sure that the product is used in an optimal and efficient manner, this manual provides users with the relevant safety information highlighted by the following symbols.

Below is a list of symbols that are used in this manual. Review them carefully to make better use of this manual.

⚠ DANGER

Indicates an imminently hazardous situation which, if not avoided, will result in death or serious injury.

⚠ WARNING

Indicates a moderately hazardous situation which, if not avoided, will result in death or serious injury.

⚠ CAUTION

Indicates a slightly hazardous situation which, if not avoided, may result in minor or moderate injury.

NOTICE

Indicates a potential hazard which, if not avoided, will result in device malfunction or property damage.

> "NOTE" indicates additional information, emphasized contents or tips that may be helpful, e.g., to help you solve problems or save time.

Symbol on Products

Observe at all times the warning signs on the equipment. Failure to do so may result in equipment damage or safety incidents, including:

Symbol	Explanation
	Lethal voltage inside! Do not touch!
	Hot surface! Do not touch the hot surface of the device.
	Protective earth. Earthing securely to ensure personal safety.

⚠ WARNING

SUNGROW assumes no responsibility for equipment damage or safety incidents resulting from failure to observe safety signs.

⚠ WARNING

Do not remove or damage the signs. Replace them immediately if they become faded or damaged.

Contents

All Rights Reserved.....I
About This Manual.....II
1 Safety Instructions.....1
1.1 General Safety Rules.....1
1.2 Ground Fault Protection.....2
1.3 Live Line Measurement.....2
1.4 Measuring Instrument.....2
1.5 Voltage-free Operations.....3
1.6 ESD Protection.....3
1.7 Safety Warning Signs.....3
1.8 Daily Operation and Maintenance.....4
1.9 Others.....4
1.9.1 Manual Storage.....4
1.9.2 Disposal of Waste.....5
1.9.3 Manual Description.....5
2 Product Description.....6
2.1 System Overview.....6
2.2 Validity.....7
2.3 Demonstration of the Model.....7
2.4 Product Composition.....7
2.5 Cable Entries.....9
2.6 Internal Design.....9
2.6.1 LV Cabinet.....9
2.6.2 Main Parts of Transformer.....11
2.6.3 MV Switchgear.....13
2.6.4 Communication Distribution Panel.....13
3 Identify and Store the MV Station.....15
3.1 Scope of Supply.....15
3.2 Identifying the MV Station.....15
3.3 Checking for Transport Damages.....16
3.4 Storage.....16
4 Mechanical Installation.....17
4.1 Transport.....17
4.2 Hoisting the MV Station.....18

4.2.1 Safety Precautions....19
4.2.2 Hoisting....20
4.2.3 Fastening of Connectors....21
4.3 Foundation....22
4.3.1 Selection of Installation Site....22
4.3.2 Recommended Foundation Construction Plan....23
4.3.3 Fixing the MV Station(optional)....24
4.4 Installing the Drain Valve/Oil-Water Separator....25
4.4.1 Installing the Drain Valve(Optional)....25
4.4.2 Installating Oil-Water Separator (Optional)....26
4.5 Installation Verification....26
4.6 Clearance Requirement....27
4.7 Removing Rain cover and Sealing Tapes....27
5 Electrical Installation....29
5.1 Safety Instructions....29
5.1.1 Generals Rules....29
5.1.2 Five Safety Rules....31
5.2 Circuit Diagram....31
5.3 Preparation before Cable Connections....32
5.3.1 Installation Tools....32
5.3.2 Opening the Door....32
5.3.3 Checking the Cables....33
5.3.4 During Connection....33
5.4 Ground Connection....33
5.5 LV Connection....35
5.5.1 Cable Layout....35
5.5.2 Wiring Step....39
5.5.3 Secure Cables....42
5.6 MV Side Connection....43
5.6.1 Inspection Before Wiring....43
5.6.2 Procedure....43
5.6.3 Securing MV Cable....44
5.7 Communication Distribution Panel Connection....46
5.8 PLC Communication Connection(Optional)....47
5.9 Checking after Electrical Connection....51
6 Powering up and Powering down....52
6.1 Operation before Power on....52
6.1.1 Adjusting De-energized Tap Changer....52
6.1.2 Opening Pressure Relief Valve....53
6.1.3 Installing Dehydrating Breather....53

6.1.4 Installing Surge Arrester (Optional)....54
6.1.5 Removing Foam Part from Oil Thermometer....55
6.1.6 Oil Drain....55
6.2 Checking before Power on....58
6.2.1 MV Station Container....58
6.2.2 MV Switchgear....58
6.2.3 MV Transformer....58
6.2.4 LV Cabinet....59
6.3 Powering Up Steps....59
6.4 Powering Down Steps....60
7 Troubleshooting....62
8 Routine Maintenance....64
8.1 Safety Instructions....64
8.2 Maintenance....65
8.2.1 Introduction....65
8.2.2 Maintenance Interval....65
8.3 Checking and Cleaning the Filter....75
8.3.1 Checking and Cleaning the Air Inlets....75
8.3.2 Checking and Cleaning Air inlets of the Heat Exchanger....76
8.4 Cleaning the Floor Drain....76
8.5 Appearance Repair....77
8.5.1 Detergent Cleaning....77
8.5.2 Finish Paint Repair....78
8.5.3 Double-Layer Paint Repair....80
8.6 Replace the Fuse of LV Cabinet....84
8.7 Replace the Fans of LV Cabinet....85
9 Appendix....88
9.1 Technical Parameters....88
9.2 Tightening Torques....91
9.3 Quality Assurance....92
9.4 Contact Information....93

1 Safety Instructions

Operators must read through the manual carefully and have a good understanding of the relevant safety instructions before performing any operation on the MV Station.

Observe all the safety instructions listed in this manual and the user manuals for the transformer and MV Switchgear, etc.

1.1 General Safety Rules

⚠ DANGER

Touching the terminals or contactors connected to the grid may lead to electric shock!

- **Do not touch the terminals or conductors connected to the grid.**
- **Respect all safety instructions on the grid connection.**

⚠ DANGER

Lethal voltages are present inside the device!

- **Pay attention to and follow the warning signs on the device.**
- **Respect all safety instructions in this manual and other pertinent documents.**

⚠ DANGER

Electric shock or fire may occur due to device damage or system fault.

- **Visually inspect the MV Station for device damages or other hazards.**
- **Check if the external devices and circuit connections are safe.**
- **Only operate the device when it is safe to do so.**

⚠ WARNING

All installations and operations on the MV Station must be in full accordance with the national and local regulations and standards.

⚠ WARNING

Ensure that the installation environment (such as voltage, temperature, humidity, altitude, pollution level, water-proof and dust-proof level) is within the scope of equipment specifications.

⚠ WARNING

The locking device on the pressure relief valve must be removed before operation. refer to "6.1.2 Opening Pressure Relief Valve".

⚠ WARNING

The installation, electrical connection, commissioning, maintenance, and troubleshooting must be carried out by professional electrical technicians conforming to local codes. Before performing operations, operators should have read this manual completely and mastered the safety issues related to the operation.

1.2 Ground Fault Protection

⚠ DANGER

If a ground fault occurs in the PV system, some parts that are supposedly voltage-free may carry lethal voltage. Accidental touch may cause serious damage. Make sure there is no system ground fault before performing operation and take proper protective measures.

1.3 Live Line Measurement

⚠ DANGER

Before electrical connection, please ensure that the substation and electrical equipment inside it are intact and hazard-free. All electrical connections must meet electrical standards of local country/region.

⚠ DANGER

High voltages are present inside the device. Death can result from burning and electric shock due to touching the live components of the MV Station. During live line measurement,

- **use suitable protective equipment, for example, dielectric gloves.**
- **accompanied by other persons.**

1.4 Measuring Instrument

The instrument for measuring the electrical parameters should meet the following requirements:

⚠ WARNING

- **The instrumentfor measuring the electrical parameters should be a high-quality instrument with sufficient measuring range.**
- **Make sure the connection and use of the instrument are correct to avoid arc and other dangerous situations.**
- **Use suitable protective equipment, for example, dielectric gloves during live line measurement.**

1.5 Voltage-free Operations

Perform operations on the MV Station only when all devices inside the MV Station are completely voltage-free.

- Avoid any inadvertent re-connections.
- Verify that no voltage or current is present with appropriate testing devices.
- Ground and short-circuit whenever necessary.
- Cover possible live parts to avoid inadvertent touch.
- Ensure sufficient escape room.
- After the MV Station stops, wait at least 10 minutes before operating it.
- Ensure that the MV Station is completely voltage-free.

1.6 ESD Protection

⚠ CAUTION

Devices may be damaged irreversibly by electrostatic discharge (ESD).

- **Avoid unnecessary touching of the PCB.**
- **Observe all the ESD-related safety instructions.**
- **Wear proper personal protective equipment (PPE) such as wrist strap.**

1.7 Safety Warning Signs

During transport, installation, maintenance, and troubleshooting of the MV Station, keep unauthorized persons away.

- Post warning signs near the MV Station upstream and downstream switches to prevent inadvertent connection.
- Place necessary warning signs or barriers near the on-site operation areas.

1.8 Daily Operation and Maintenance

Make sure the doors of the MV Station are closed and locked during daily operation to prevent internal devices from damages caused by rain or rodents.

Regularly check and maintain the MV Station and internal devices to ensure long-term and reliable operation of the MV Station.

⚠ WARNING

In local mode, do not perform any operation on the product (including but not limited to, handling, installing, powering on, and maintaining the product, performing electrical connection, and working at heights) in harsh weather conditions, such as thunder and lightning, rain, snow, and Level 6 or stronger winds.

⚠ WARNING

Make proper insulation protection during live line operation. At least two persons are required until the operation is done.
Properfiled rescue facilities are necessary since locations of most power stations are far away from the urban areas.

⚠ WARNING

The equipment shall be operated in accordance with local laws and regulations and strictly follow the safety precautions specified in this document.

⚠ WARNING

Before maintenance or device replacement, please ensure that the substation has been powered off and the high-voltage side switch and low-voltage side switch are disconnected.

Take the followings into consideration during daily operation and maintenance:

- The nameplate is pasted on the MV Station body. It contains important parameter information of the devices. Protect the nameplate during all operations.
- Whenever necessary, wear proper protective equipment such as goggles, insulating gloves, and insulating shoes, and take all necessary auxiliary protective measures to ensure the safety of the personnel and the equipment.

1.9 Others

1.9.1 Manual Storage

Product manuals are an indispensable part of the product. Important information about the transport, installation of the MV Station is included in this manual. All the descriptions in this

manual, especially those safety-related items, must be complied with. Please read all the instructions thoroughly prior to performing any operation work on the MV Station.

- Transport and install the MV Station strictly following the descriptions in this manual. Device damage, personal injury, or property loss may follow if otherwise.
- This manual and relevant documents should be available for relevant persons at all times.

1.9.2 Disposal of Waste

When the MV Station has come to the end of its service life, it cannot be disposed of together with household wastes. Some inside components can be recycled while some components can cause environmental pollution.

Please contact the local authorized collection point.

1.9.3 Manual Description

For user convenience, there are a large number of pictures in this manual. These pictures are indicative only. For details about the device, please refer to the actual product you receive.

Keep this manual at a convenient place near the device for future reference.

All the descriptions in this manual are for the standard MV Station. Please inform us in the purchase order if you have specific requirements. The actual product you receive may differ.
This manual may not cover all possible situations. Should a specific problem not explained in this manual occur, please contact Sungrow.

2 Product Description

2.1 System Overview

The MV Station is mainly applied to large-and-medium PV power station. The MV Station can meet the modular design and quick installation requirements of the large-and-medium PV power station and can ensure the long-term, reliable, and safe power generation compliant with the grid.

MV Station is a booster device used in conjunction with the inverters. The main function is to convert the low-voltage from the inverters into medium-voltage and feed into the grid.

The MV Station integrates LV cabinet, MV transformer, MV switchgear, power distribution cabinet ,communication box and auxiliary transformer.

The PV power generation system with the MV Station is shown in the following figure.

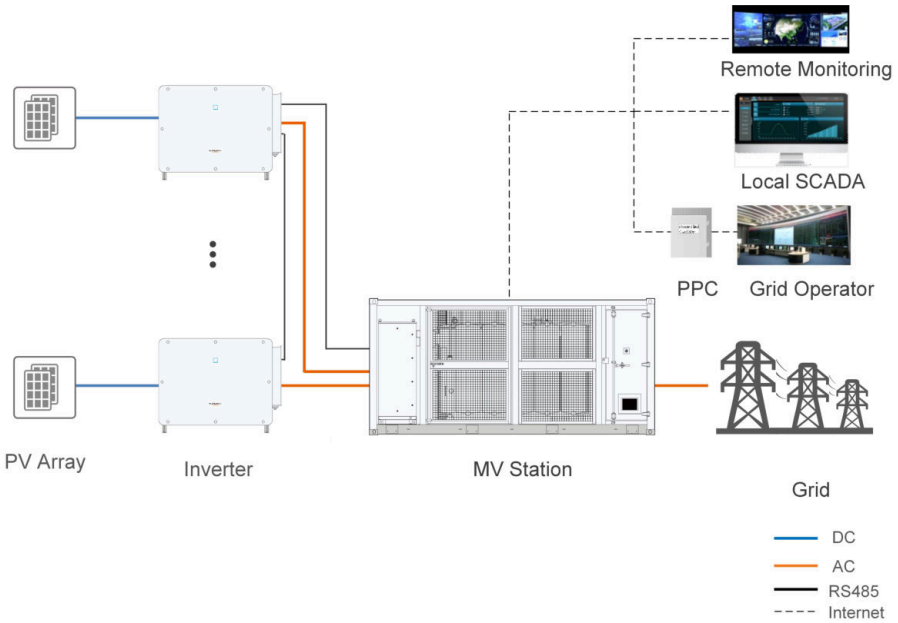

Figure 2-1 RS485 Communication

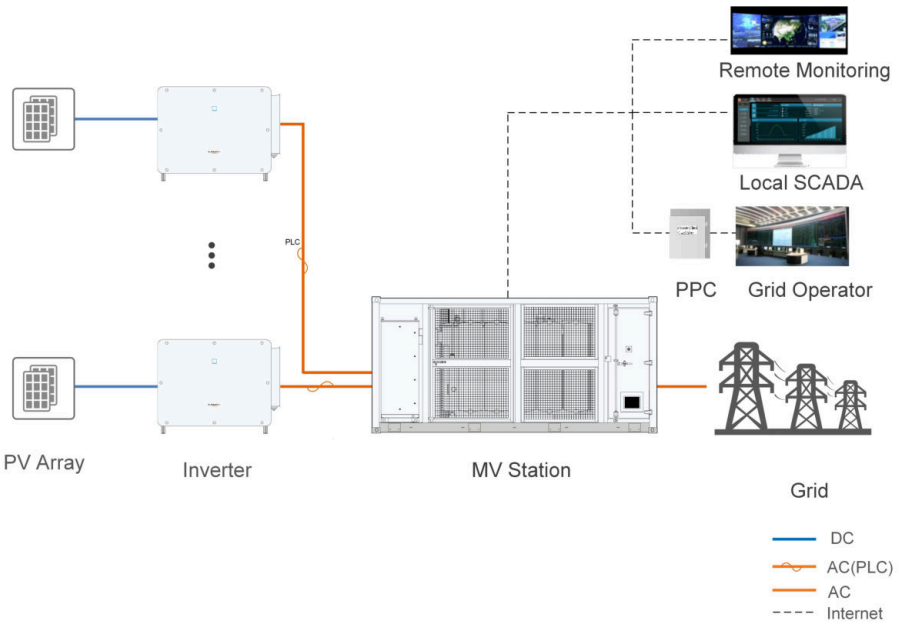

Figure 2-2 PLC Communication

2.2 Validity

This manual is intended for the following product:

- MVS8960-LV
- MVS9000-LV

Hereinafter it will be referred to as " MV Station" unless otherwise specified.

2.3 Demonstration of the Model

Model	Rated power	Devices can be connected
MVS8960-LV	8960 kVA @ 40 ℃	28 x SG350HX series
MVS9000-LV	9000 kVA @ 51 ℃	30 x SG320HX series

The function, appearance and wiring method of the models are the same, but the number of inverters is different. This manual takes MVS9000-LV as an example to briefly introduce the installation and wiring instructions of MV Station.

2.4 Product Composition

MVS9000-LV is taken as an example to introduce main devices inside the MV Station. The product Composition as shown in the following figure.

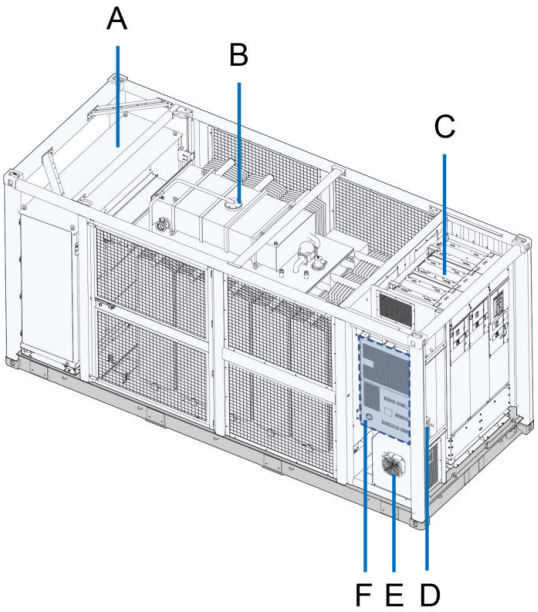

No.	Name	Description
A	LV cabinet	Connected to the PV grid-connected inverters
B	Transformer	Converts the inverter output low-voltage into grid-compatible medium-voltage
C	MV Switchgear	Grid connected protection device
D*	UPS	Supply uninterruptible power
E	Fan	For heat dissipation
F	Communication distribution cabinet	For communication and power distribution

* is optional.

2.5 Cable Entries

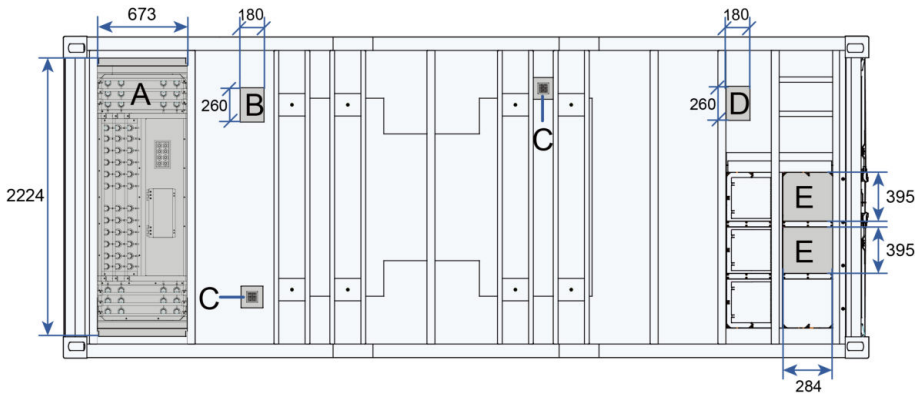

Figure 2-3 Bottom view□Dimensions in mm□

The figure above is indicative only, and actual product may differ.

No.	Name	Description
A	LV side cable entries	All LV side cables connecting the MV Station go inside through these entries.
B	Oil tank cleaning port	Clean the oil tank through this port.
C	Oil leakage protection port	Clean the oil leakage protection device through this port.
D	Power distribution cables entry	All power distribution cables connecting external device go inside through this entry.
E	MV side cable entries	All MV side cables connecting the MV Station go inside through these entries.

2.6 Internal Design

2.6.1 LV Cabinet

The LV cabinet is located at the LV room inside the MV Station. It is used to converge and transmit low voltage from the inverter to the step-up transformer, and feed it into the MV grid.

Appearance

The LV cabinet is located at the LV room inside the MV Station.

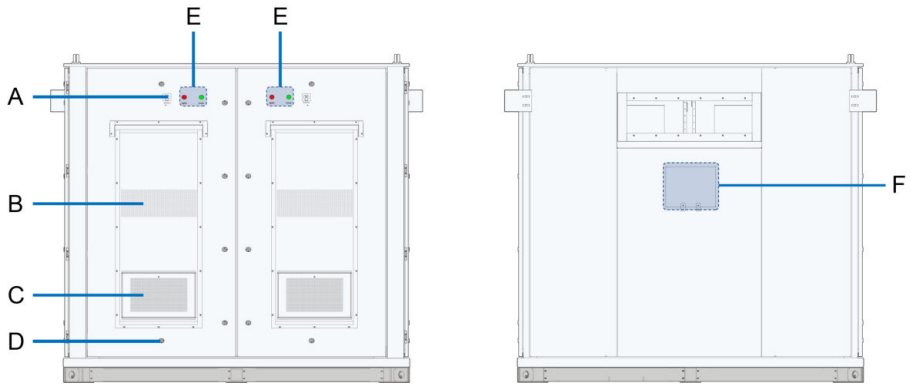

The figure above is indicative only, and actual product may differ.

No.	Name
A	Remote/Local switch button
B	Air outlet area
C	Air inlet area
D	Door lock, support for padlocks
E	Air circuit breaker control switch button In local mode□**OPEN** represents disconnecting the ACB. In local mode□**CLOSE** represents closing the ACB.
F	Pressure relief door

Pressure relief door corner piece

Before operation, the two fixing bolts between the corner pieces of the pressure relief door on the back of the lv cabinet and the back plate need to be removed. The positions of the fixing bolts are shown in the following figure:

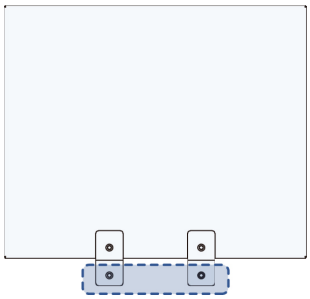

- During normal operation, ensure that the pressure relief door is closed.
- When maintenance of the MV Station involves dismantling the back panel, ensure that the pressure relief door is closed after the maintenance is completed.
- f there is a short circuit or arc inside the low-voltage cabinet, after repairing the fault, check and close the pressure relief door. If the pressure relief door is severely deformed, contact the SUNGROW for replacement.

Internal Structure

Take MVS9000 LV cabinet as an example, internal structure shows the figure below.

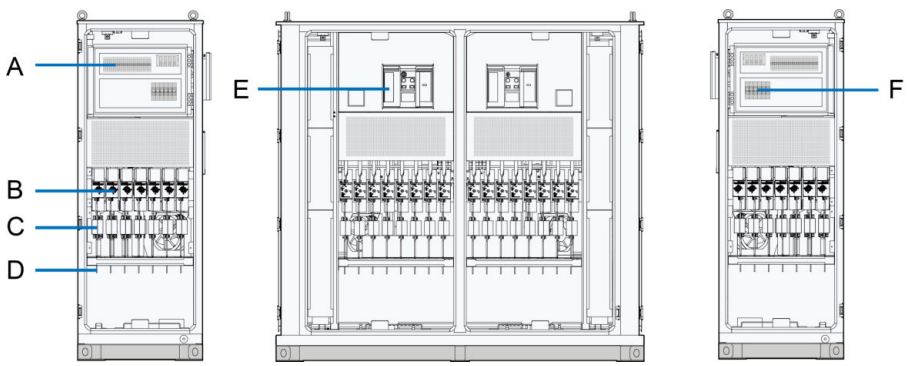

The figure above is indicative only, and actual product may differ.

No.	Name
A	Communication and distribution terminals
B	Disconnector
C	Branch fuse
D	LV wiring terminals
E	ACB: Air circuit breaker
F	Fuse

NOTICE

ACB can only be closed when there is a lock, and the lock cannot be pulled out after closing.

2.6.2 Main Parts of Transformer

The transformer room mainly includes a transformer inside.

Figure	Name	Description
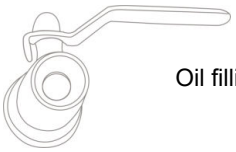	Oil filling valve	when oil level of the MV transformer oil tank is low, open the valve for oil filling.
	Pressure Relief Valve	The valve automatically releases when the oil pressure inside the oil tank reaches 55kPa.
	Oil Level Indicator	The MV transformer will stop operating if the oil level falls below the lowest scale on the oil level indicator or below the oil level scale required for safe operation of the transformer. When the oil level is excessively high, open the drain valve to lower the oil level. When the oil level is excessively low, disconnect the transformer and check the oil tank for leakage.
	Oil Temperature Indicator	The alarm temperature is set to 95℃. When the oil temperature reaches the value, alarm signals will be sent to the intelligent power distribution cabinet or a communication unit provided by the customer. The tripping temperature is set to 100℃. When the oil temperature reaches the value, tripping signals will be sent to the intelligent power distribution cabinet or a communication unit provided by the customer. At the same time, the transformer will be disconnected from the upstream and downstream devices.
	Oil drain valve	Open the valve for oil drainage when the oil level is excessively high or when operations such as maintenance are required.

Figure	Name	Description
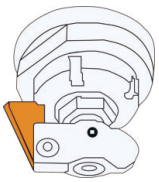	Tap changer	The tap changer has five tap positions: 1, 2 , 3, 4 , 5. For more details, refer to 6.1.1 Adjusting De-energized Tap Changer

Parameters marked with a) and b) are factory default values and can be adjusted according to actual condition.

2.6.3 MV Switchgear

The MVswitchgear consists of load switch cabinet, circuit breaker cabinet, and direct cable connection cabinet.

Names of the cabinets vary with MV switchgear manufacturers.

For example, the appearance of the CCV cabinet of Siemens is as follows:

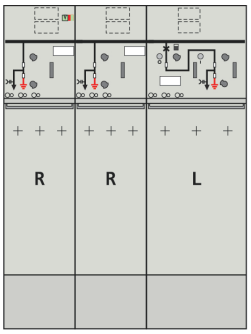

24kV

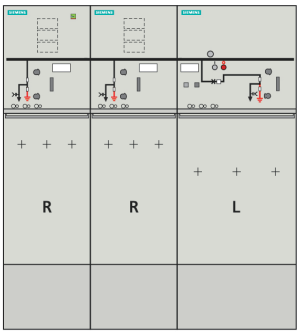

36kV

2.6.4 Communication Distribution Panel

The internal layout of the communication distribution panel is shown in the following figure.

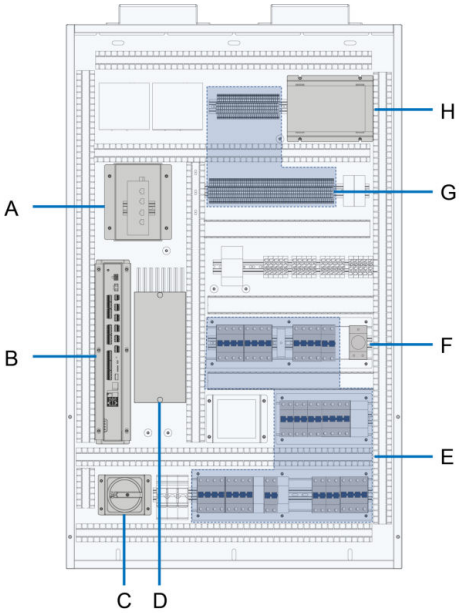

The figure above is indicative only, and actual product may differ.

No.	Discription
A	Ethernet switch
B	Logger4000
C	Load switch
D	Fiber terminal box
E	Circuit breaker
F	Socket
G	Wiring terminal block
H	24Vdc power supply

3 Identify and Store the MV Station

3.1 Scope of Supply

Table 3-1 Standard deliverable list

No.	Name
Document	Certificate of Quality, Warranty Card, Product Test Report, System Manual
keys	Container door keys, LV SWG door keys
Screw	M6X20 hex head bolt three combination
	M8X20 hex head bolt three combination
	M10X25 hex head bolt (stainless steel)
	M12X40 hexagonal head bolt (LV cabinet input)
Flat washer class A	Φ10 (Stainless steel)
	Φ12
Standard spring washer	Φ10 (Stainless steel)
	Φ12
Nut	M12

The components in the table are for reference only, and the actual packing list shall prevail.

3.2 Identifying the MV Station

Identify the MV Station from its nameplate. The nameplate contains the following information: MV Station model, major technical parameters, origins, and serial number.

⚠ WARNING

Very important technical parameters and MV Station-related parameters are displayed on the nameplate.
Protect the nameplate at all times!

3.3 Checking for Transport Damages

The MV Station has been strictly inspected and tested before delivery. Despite robust packaging, the container or inside devices may be damaged during transport. Therefore, once you receive the MV Station, a detailed inspection is necessary.

If any damage is detected, contact the forwarding company or Sungrow immediately.

Examine the contents of the shipment to check the scope of delivery for completeness.

- Check to make sure the MV Station and inner devices are of the same models as those in your order;
- Check thoroughly the MV Station and inner devices for any possible damages during transport.

⚠ WARNING

Install and commission the MV Station only when it is technically faultless! Make sure before installing the MV Station that:

- **the MV Station is intact without any damage; and**
- **all devices inside the MV Station are intact without any damages.**

3.4 Storage

If the MV Station is not to be installed immediately after delivery, store it appropriately:

- Store the MV Station indoors, for example, large warehouse or workshop, to prevent possible condensation or damp.
- If the MV Station has to be stored outdoors, elevate the MV Station base according to the geological and ambient conditions.
- When the ambient temperature is too low, heat the MV Station internal devices. Temperature: -40℃~+70℃. Relative humidity: 0 to 95%, and non-condensation
- Ensure that all the doors of the MV Station are closed.
- Store the MV Station on a dry, clean, and solid ground with sufficient load-bearing capacity. The ground should be flat without water, bumps, or plantings.
- Lock the MV Station internal devices and the MV Station during storage.
- Take proper protective method to prevent the water and dust penetrating into the MV Station. Protect the MV Station air inlets and outlets at least.
- The UPS and their batteries must be charged once every six months after leaving the factory (EXW Date).

Regularly, once every half a month at least, check the MV Station and internal devices.

4 Mechanical Installation

⚠ WARNING

Respect all local standards and requirements during mechanical installation.

⚠ WARNING

During installation and operation, follow the procedure for working at heights when walking on the top of the product.

4.1 Transport

All devices are installed inside the MV Station before delivery. The MV Station should be transported as a whole. Transport the MV Station by a crane with sufficient load capacity.

The MV Station is delivered to the user by the forwarding company. After unloading, the MV Station will be transported to the installation site by the plant staff.

⚠ WARNING

Local standards and regulations on the transport and loading & unloading of the container, especially those safety instructions, should be observed at all times.

- **All the tools used on the product, or during operation, must have undergone proper maintenance.**
- **The MV Station must be transported by qualified personnel. Qualified personnel are those who have relevant training experience, especially safety-related experience.**

⚠ WARNING

Before transport, secure the platform using the four bottom securing points to the transport vehicle.
Choose the appropriate crane or hoist to transport the MV Station. The crane or hoist must be sufficiently capable of bearing the MV Station weight.

Keep in mind the dimensions and total weight of the MV Station at all times!

Ensure that the following requirements are met:

Road conditions:

- Before transport, inspect the transport route in advance, particularly for obstructions, to ensure the vehicle can travel safely and smoothly along the route. Pre-transport route inspection should cover the following items: road conditions, height limits, actual

heights, width limits, actual widths, weight limits, traffic restrictions, and potential obstructions.

- In most cases, the total weight of a truck that carries the product will exceed the general weight limit on the road. Therefore, to transport the product in a truck, an overweight permit from the relevant local agency in that area may be required.
- Drive at a constant speed during transport, ≤70km/h on expressways, ≤50km/h on regular roads, ≤40km/h on Class 1 and 2 roads, ≤30km/h on roads in wind farms, ≤5km/h when turning. When crossing a bridge, maintain a slow, even speed of ≤5km/h and stay in the middle of the road. Sudden braking is not allowed.
- To transport the product by water, ensure the waterway meets the requirements for the vessel to sail fully-loaded.

Environmental conditions:

- The cabinet doors of the MV Station must all be locked.
- The MV Station must stand upright during transport.
- If the MV Station is transported lying down horizontally, ensure the tilt is ≤15° during the whole transport process.
- Drive at a steady speed during transport, avoiding sudden braking or speeding up, with acceleration ≤3g ("g" for gravitational acceleration).
- An additional traction vehicle may be required when the road has a gradient.
- Anything, which may hinder the transport, like trees, cables (or the like), should be removed.
- If possible, transport the MV Station on fine weather days.

Additionally, the following requirements should be met when the MV Station is placed on the ground:

- Place the MV Station carefully and gently. Do not pull or push the MV Station on any surface.
- The place should be firm and flat with good drainage and no obstacles or outshoots. The MV Station should be supported by the four feet.

4.2 Hoisting the MV Station

4.2.1 Safety Precautions

⚠ WARNING

- **Observe the safety operating rules of the crane at all times.**
- **The hoisting work must be carried out in accordance with the hoisting requirements of the MV Station.**
- **Standing within 5 to 10 meters away from the hoisting areas is strictly prohibited! Anybody standing under the boom or MV Station is strictly prohibited in the whole hoisting process.**
- **The hoisting work must be stopped on violent weather days. For example, in strong wind, heavy rain, or thick fog conditions.**

Precautions Before Hoisting

- Use only specialized cranes, otherwise, it may result in personal injury or MV Station damage.
- All safety requirements must be met.
- A professional instructor is required in the whole hoisting process.
- Ensure the product is held steady and does not tilt during the whole hoisting process.
- All the used slings must have the load-bearing capacity of at least 30t.
- The crane should have sufficient arm length and radius of gyration.
- Make sure the connections of slings are all secure and reliable, and the length of the sling connected to each corner fitting is the same.
- The length of the slings can be adjusted appropriately according to on-site conditions.
- Hoisting the MV Station by connecting the four top corner fittings.
- Some accessories may be required to ensure the safety during hoisting.
- All doors of the MV Station are closed and locked.

Precautions During Hoisting

- Ensure the product is held steady and does not tilt during the whole hoisting process. The tilt during hoisting should be ≤30°.
- Hoist the MV Station in a vertical manner. Do not drag or drop the MV Station on any surface.
- Keep the container stable and horizontal during hoisting, and ensure that the diagonal gradient of the container is within 5 degrees.
- The hoisting acceleration should not exceed 1.5g ("g” for gravitational acceleration).
- When the MV Station has been hoisted for about 300mm away from the ground, stop to check if all the connections are still firm. After confirmation, continue hoisting the MV Station.
- Lift and land the container slowly to prevent shock to the internal devices.
- When transported to the final location, the MV Station should be put down slowly and steadily.
- The final location should be firm, level, and well-drained.

- At the site, provide adequate support for the product at the support points on the bottom of the container.
- Remove the ropes after ensuring that the container is placed evenly on the container bases.
- Secure the container hoisted before hoisting another one.

Please observe the following items:

The following figure illustrates the hoisting operations. Circle A describes the work areas of the crane. Anybody standing inside the circle B is prohibited for safety considerations.

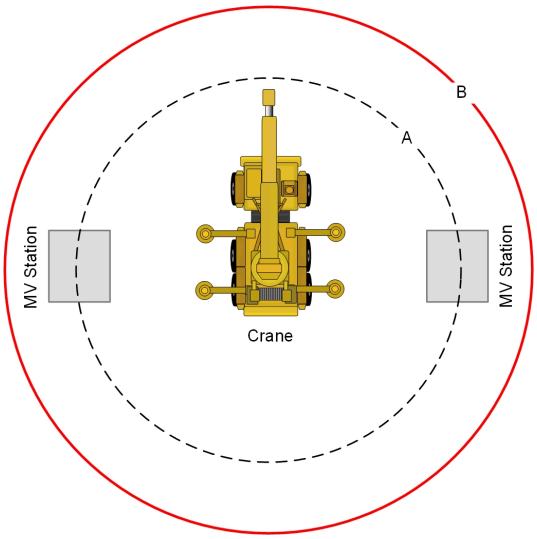

Figure 4-1 Hoisting the MV Station

4.2.2 Hoisting

During the whole hoisting process, please observe the following rules:

- Hoist the MV Station in a vertical manner. Do not drag or drop the MV Station on any surface.
- Keep the container stable and horizontal during hoisting, and ensure that the diagonal gradient of the container is within 5 degrees.
- When the MV Station has been hoisted for about 300mm away from the ground, stop to check if all the connections are still firm. After confirmation, continue hoisting the MV Station.
- Lift and land the container slowly to prevent shock to the internal devices.
- When transported to the final location, the MV Station should be put down slowly and steadily.
- The final location should be firm, level, and well-drained. The MV Station is supported by four bottom fittings on the ground.
- Remove the ropes after ensuring that the container is placed evenly on the container bases.

- Secure the container hoisted before hoisting another one.

The MV Station should be hoisted by four top corner fittings as shown in the following figure.

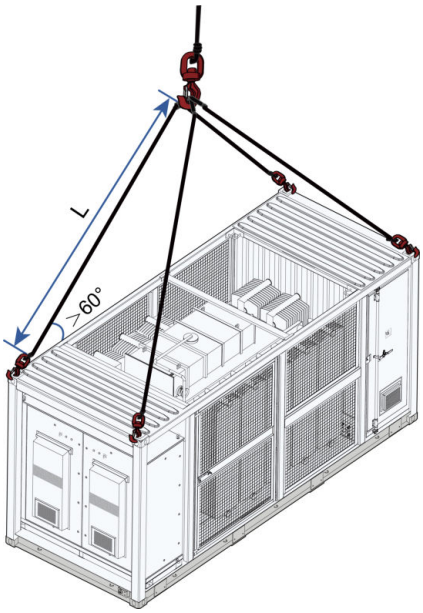

Figure 4-2 Hoisting from top fittings

Table 4-1 The Substation Hoisting Parameters

Item	Requirement
Steel Length(L)	□ 6.5 m
Steel Rope Qty.	4 pieces, the load of a single steel is not less than 30T.

4.2.3 Fastening of Connectors

Use slings with hooks or U-hooks to hoist the MV Station.

The lifting devices should be correctly connected to the MV Station.

Lifting device	Hook	U-hook
Connections	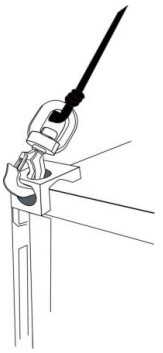	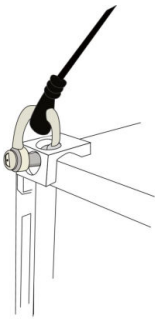
Notice	Insert the hook from inside to outside.	Lateral pin of the U-hook should be tightened.

⚠ WARNING

- **National and local safety rules should be observed at all times.**
- **Violating relevant safety rules may void pertinent warranty claims from Sungrow.**

4.3 Foundation

4.3.1 Selection of Installation Site

When selecting the installation site, consider the following requirements at least:

- Ambient and geological conditions, such as stress wave emissions, the level of underground water table and etc. should be taken into account.
- Far away from strong vibration, strong noise source and strong electromagnetic interference area.
- The ambient environment should be dry, well ventilated, and far away from inflammable materials.
- The ambient environment should be far away from dust, soot, harmful gases and the production or storage of corrosive, flammable, explosive places.
- The site location shall not be in a low-lying area and the site level shall be higher than the historical high water level in the area.
- Good soil condition, solid ground, no rubber soil, soft soil and other adverse geological conditions, do not choose the ground which is easy to get into water and easy to sink .
- The ground must be firm and level, with no risk of collapse or sliding. Do not select an area at risk of foundation settlement.
- The installation site should take the ventilation into account.

- Choose the open position, to ensure that there is no obstacles in 10 meters from the equipment surrounding.
- Keep at least 500 meters away from residential areas to avoid noise pollution.
- The ground at the installation site must be compacted enough. Relative compaction of the ground should be equal to or greater than 98%. Otherwise, take proper methods to strengthen the ground.

4.3.2 Recommended Foundation Construction Plan

The following conditions must be fulfilled:

- The bottom of the foundation should be firm enough.
- The foundations must be suitable for the weight of the MV Station.
- The foundation should be higher than the pea gravel ground on site to prevent the rain from damaging the base or penetrating into the MV Station.
- Sufficient cross-sectional area and depth of the foundation should be maintained. The depth is designed according to local soil conditions.
- Cable route should be taken into account.
- The LV cable trench must have enough space for personnel to enter.
- Backfill after securing cable clamps and connecting cables.

Overall construction effect is shown below.

The foundation plan described in this chapter is for reference only.

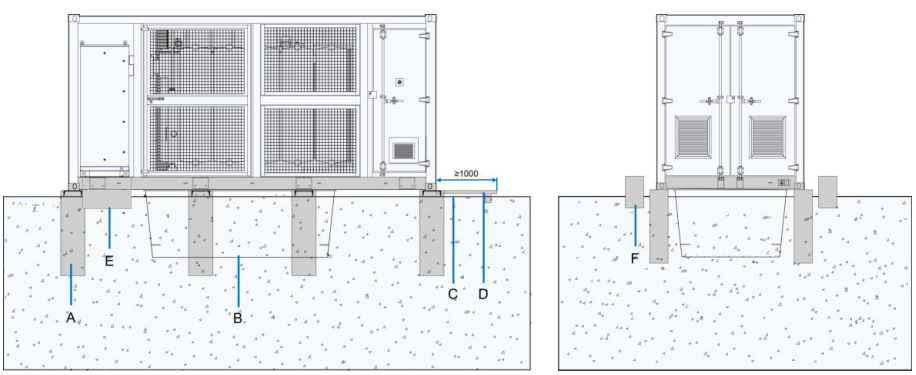

No	Name	Part source
A	Foundation	Not in the scope of delivery
B	Oil tray	
C	Pea gravel ground	
D	Platform	
E	Cable clamp	

No	Name	Part source
F	Step	

Backfill after securing cable clamps and connecting cables.

4.3.3 Fixing the MV Station(optional)

The position for installing L-shape angle steel is reserved at the bottom of the container.

Preparing Installation Tools

The following tools may be used in installing the L-shape angle steel:

No.	Name	Resource
1	Marker	Beyond the scope of delivery
2	φ22 percussion drill	Beyond the scope of delivery
3	Angle steel	In the scope of delivery
4	M16×150 expansion bolts	Beyond the scope of delivery
5	M16×50 screw	In the scope of delivery

Installation Method

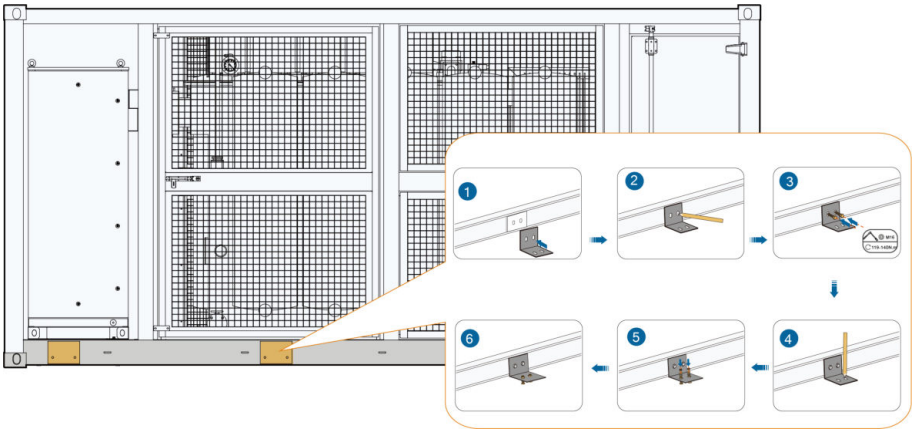

Other Precautions

NOTICE

A drainage system should be designed on the installation site to prevent the MV Station from being immersed in water during heavy rainfalls.

NOTICE

Do not plant any trees near the MV Station installation site to prevent the damage of the MV Station caused by tree leaves or stems.

4.4 Installing the Drain Valve/Oil-Water Separator

There are two design schemes at the bottom of MV Station. Drain valve or oil-water separator can be installed according to customized requirements.

NOTICE

For ease of installation, it is recommended to install the drain valve or oil-water separator before hoisting the MV Station to the installation position.

NOTICE

During the installation of the oil-water separator, first remove the two plastic plugs of the equipment. Then, install the oil-water separator on one of the ports, and seal the other port with a stainless steel plug.

4.4.1 Installing the Drain Valve(Optional)

Prerequisite

Installation Parts

Before installing the drain valve, the required parts:

- Connector(in the scope of delivery)
- Drain valve(in the scope of delivery)
- Oil pipe (beyond the scope of delivery)

Installation Methods

Step 1 Screw the connector into the mounting hole at the bottom of the MV Station.

Step 2 Install the drain valve on the connector.

Step 3 (Optional operation) Connect the oil pipe to the drain valve.

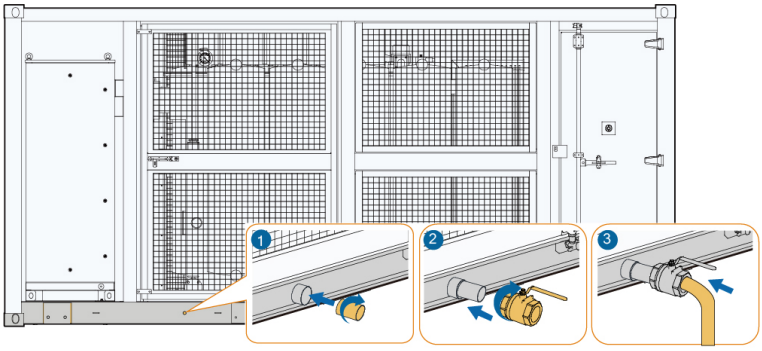

--End

Precautions

- If the oil pipe is connected, the drain valve needs to be opened.
- If the oil pipe is not connected, the drain valve needs to be closed.

4.4.2 Installating Oil-Water Separator (Optional)

Overview

The installation position of the oil-water separator is reserved at the bottom of the MV Station,located on the backside of the MV Station, as shown in figure A below.

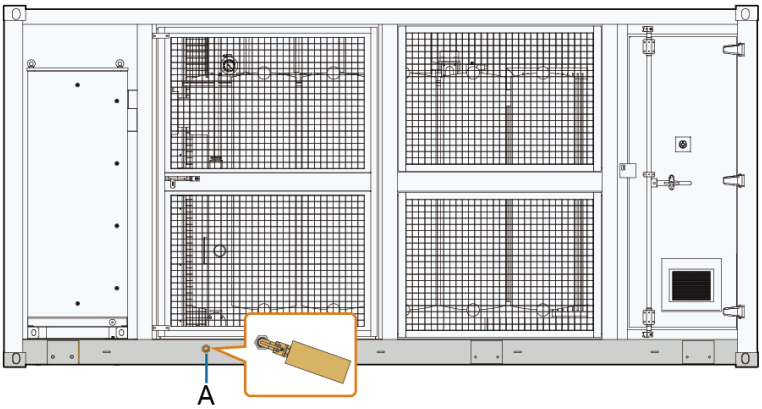

If the installation of the oil-water separator is needed, please contact SUNGROW customer service or designated partners.

4.5 Installation Verification

- Bolts and nuts are tightened.
- The container is in good contact with and evenly supported by the bases underneath.
- All container doors can be smoothly opened and closed.

4.6 Clearance Requirement

On site, MV Station works together with the inverter. Required clearances around MV Station and the inverter are shown in the figure below(Unit in mm).

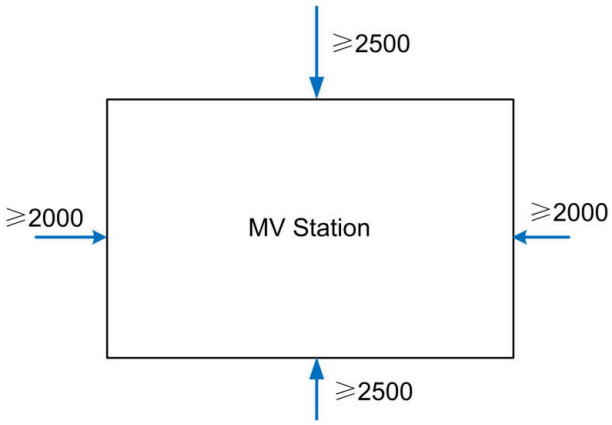

* The distance illustrated in this figure is the minimum values.

NOTICE

Sufficient maintenance space should be reserved around the equipment.

4.7 Removing Rain cover and Sealing Tapes

The sealing tapes (shown as A in the following figure) and rain cover are attached to the enclosure of the MV Station to prevent moisture penetration during transportation. Before putting the MV Station into operation, remove the rain cover and sealing tapes of the MV Station.

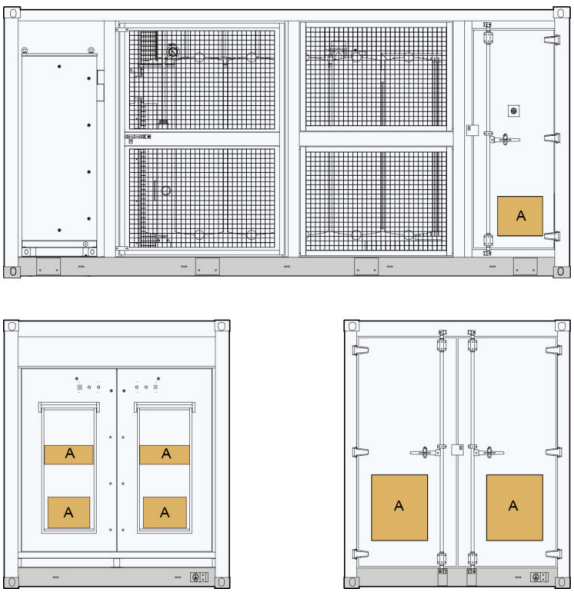

For MVS transformers with integrated oil trays, the oil leakage hole is covered witha protective film. Please remove this film on site during installation.

5 Electrical Installation

5.1 Safety Instructions

5.1.1 Generals Rules

⚠ DANGER

High voltage! Electrical hazards!

- **Do not touch the live components of the device.**
- **Make sure the MV Station are voltage-free before installation.**
- **Never put flammable materials in the vicinity of the MV Station.**

⚠ DANGER

If a ground fault occurs in the PV system, some parts that were voltage-free before may contain lethal voltage. Accidental touch may cause serious damage. Make sure there is no system ground fault before operation and take proper protective measures.

⚠ WARNING

Observe all the country-specific standards and regulations.
Connect the MV Station to public grid only after receiving authorization from the local network operator.

⚠ WARNING

Only professional electricians can perform the operations described in this chapter.
Observe all the instructions to connect the wires.

⚠ WARNING

Disconnect all the switches before electrical connection.

⚠ WARNING

Sand and moisture penetration may affect the performance of electric devices inside the MV Station!

- **Do not perform electrical connection in sandy season or when the ambient relative humidity is above 95%.**
- **Perform electrical connection on fine weather days.**

⚠ WARNING

Improper torque used may cause a fire to the connection point!
Fix the bolts by strictly following the torque requirements in this manual during electrical connection.

⚠ WARNING

Too small bending radius or excessive intertwine may damage the fiber!
When selecting fiber as the communication cable, please follow the related requirements of the fiber manufacturer about the min. allowable bending radius.

⚠ WARNING

Only professional electricians can perform the electrical connection. Professional electricians should meet the related requirements listed in "1 Safety Instructions" in this manual. Sungrow should hold no liability for any personal injury or property loss caused by ignorance of the safety instructions.

⚠ WARNING

Ensure the electrical insulation is satisfied before laying the cables. Follow the EMC regulation and lay the power cable and communication cable in different layers. Provide support and protection to the cables to reduce the stress of the cables when necessary.

⚠ WARNING

Strictly follow all the instructions when connecting the cables.

⚠ WARNING

Ensure that all switches in the LV cabinet and all disconnectors remain open until the electrical connections are completed.
Disconnect all external connections to the LV cabinet and all connections to the internal power supply of the equipment. Ensure that none of the disconnected circuits can be accidentally re-energized. If a UPS is installed, power it off before proceeding.

NOTICE

The installation and design of the MV Station must fulfill national and local standards and regulations.
Sungrow should hold no liability for the MV Station or system fault caused by ignorance of the description in this manual.

NOTICE

For cables in areas subject to settlement, secure them horizontally to a base integrated with the foundation. Provide at least three fixing points, with a distance of 1200 mm between adjacent fixing points.

Select optical fibers as the external communication cable to lower the signal interference.

5.1.2 Five Safety Rules

During electrical connections and other operations on the inside device, observe the following Five Safety Rules:

- Disconnect all the external connections and disconnect the MV Station internal power supply
- Avoid any inadvertent re-connections.
- Verify that no voltage or current is present with appropriate testing devices.
- Ground and short-circuit whenever necessary.
- Cover possible live parts to avoid inadvertent touch.

5.2 Circuit Diagram

The circuit diagram is as follows.

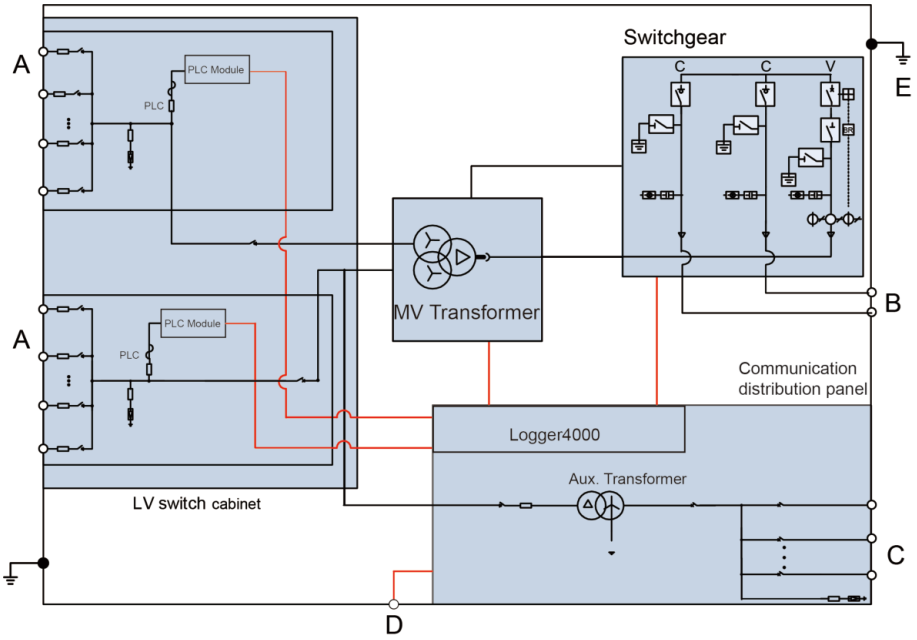

Table 5-1 Items in figure

Item	Name	Recommended specifications
A	Connect to the inverter	Single splicing Max. 400 mm^2 aluminum wire Double splicing Max. 185 mm^2 aluminum wire
B	Connect to MV grid	Depends on the switchgear type. Specifically, refer to the corresponding manual.

Item	Name	Recommended specifications
C	Power distribution port	—
D	Communication port	—
E	Grounding point	—

5.3 Preparation before Cable Connections

5.3.1 Installation Tools

Installation tools include but are not limited to the following recommended ones, and other auxiliary tools or components can be used on site when necessary.

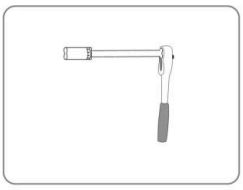
Torque wrench

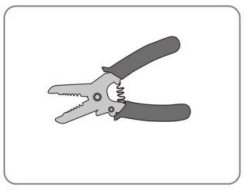
Wire stripper

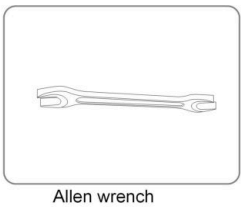
Allen wrench for terminal fixing

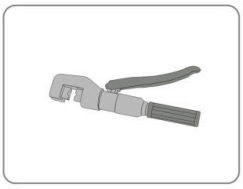
Terminal crimper

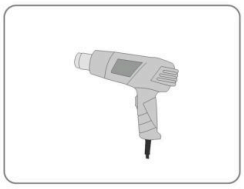
Heat blower

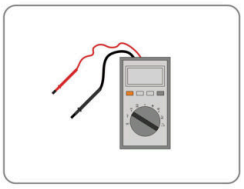
Megger and multimeter

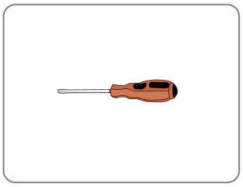
Screwdriver

Before operating the product, check and ensure that the tools to be used have undergone regular maintenance.

5.3.2 Opening the Door

1. Insert the key.
2. Turn the handle counterclockwise to unlock the door.

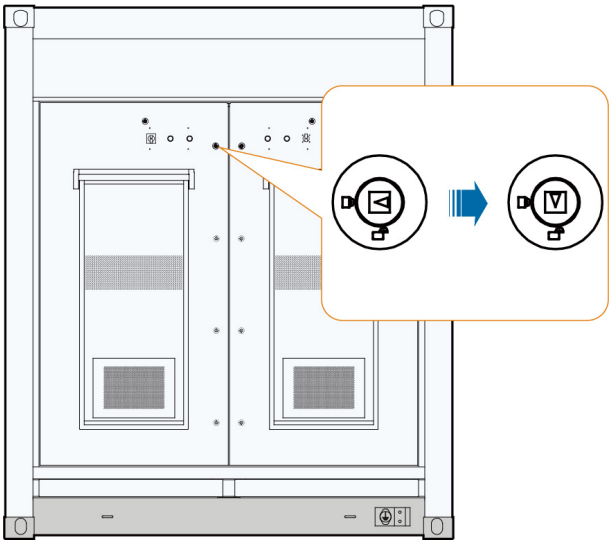

5.3.3 Checking the Cables

⚠ WARNING

Check to ensure the intactness and insulation of all cables before electrical connection. Poor insulation or damages in the cables may cause hazards. Replace them if necessary.

5.3.4 During Connection

⚠ WARNING

- **Do not pull the cables hard during connection.**
- **Make sure there is enough wire bending space for all connection cables.**
- **Take proper methods to reduce the stress of cables.**
- **Check carefully to ensure the correctness and fastness of the connections.**

5.4 Ground Connection

Generally, the ground connection includes equipotential connection of internal devices and external grounding.

Equipotential Connection of MV Station Internal Devices

All electrical devices inside the MV Station should be connected equipotentially through the total equipotential connection copper bar inside the MV Station, i.e. the grounding terminal of all the main electrical devices should connect to the total equipotential connection copper bar.

The connection of the internal main electrical devices to the grounding copper bar has been finished before delivery.

External Grounding

For ease of onsite cable connection, two grounding points are designed at the exterior of the MV Station.

The external grounding points of the MV Station can be grounded in the following two manners:

- Connect the grounding cable to the external grounding points with M10 bolts, where the recommended cable is of 50 mm^2 to 95 mm^2. After the wiring is completed, it needs to spray paint and anti-corrosion treatment.

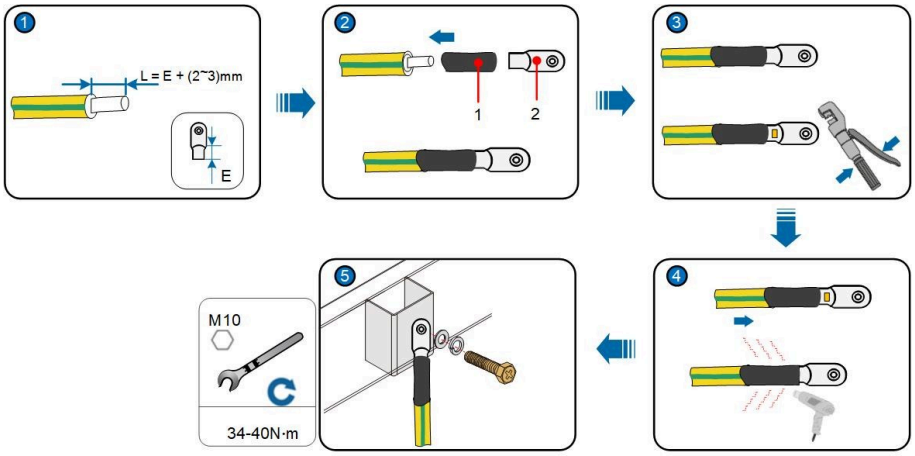

Figure 5-1 Grounding Cable

- Weld the grounding steel flat onto the external grounding point, after which anti-corrosion processing needs to be performed. After the wiring is completed, it needs to spray paint and anti-corrosion treatment on the welding area.

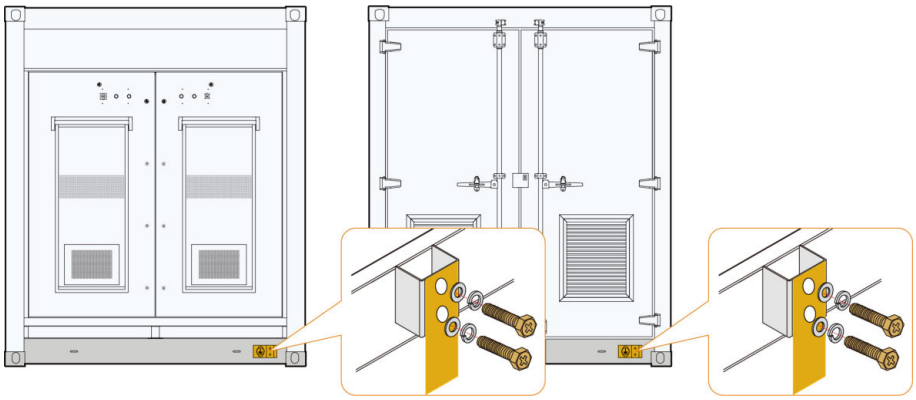

Figure 5-2 Grounding Flat Steel

It is recommended that two points of the MV Station should be connected to the ground system of the PV plant.

> The MV Station needs to be grounded on site. The following operations should also be conducted on site:

Measure the electrical conductivity between the device ground terminals and the total equipotential connection copper bar to ensure the effectiveness of the internal ground connection.

Perform the external grounding according to on-site situation and instructions of the plant staff.

The grounding resistance should be no more than 4Ω.

> The grounding resistance should be determined according to local standards and regulations.

⚠ WARNING

The country-specific regulations and standards must be observed at all times!

5.5 LV Connection

Prerequisite

The LV wiring terminals are located at the lower part of the LV cabinet, There are wiring terminals distributed on the front, left and right sides of the low-voltage cabinet. Taking the layout of the front low-voltage cabinet as an example, the terminal structure is shown in the figure below.

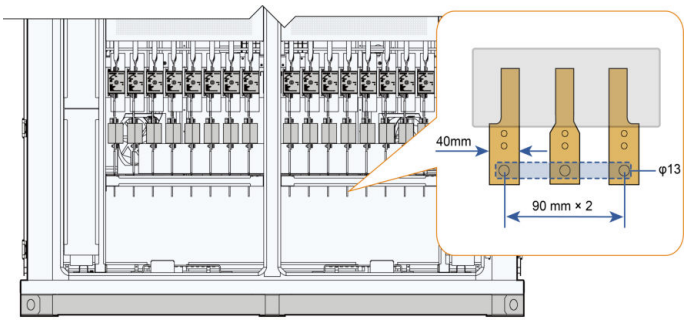

5.5.1 Cable Layout

When the upstream inverter is SG320HX/SG350HX series, there are four ways to connect the LV side cables.

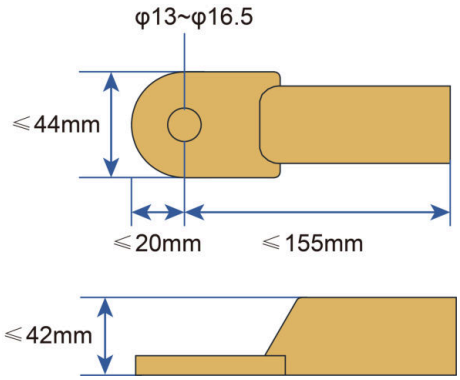

Figure 5-3 Single splicing cables

Table 5-2 Requirements

Name	Cable specifications	Cable outer diameter
Single core cable	Maximum 400mm^2	≤ 35 mm
Three-core cable	Maximum 3×400mm^2	50 mm to 78.5 mm

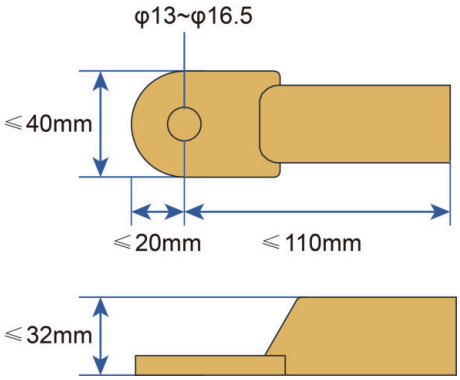

Figure 5-4 Double splicing cables

Table 5-3 Requirements

Name	Cable specifications	Cable outer diameter
Single core double splicing cable	Maximum 185mm^2	≤ 26 mm
Three-core double splicing cable	Maximum 3×185mm^2	42 mm to 50 mm

Wiring Distance Requirements

The following figure (1) shows the distance between adjacent branches after connecting a single splicing cable, while figure (2) shows the requirement for three-phase distance.

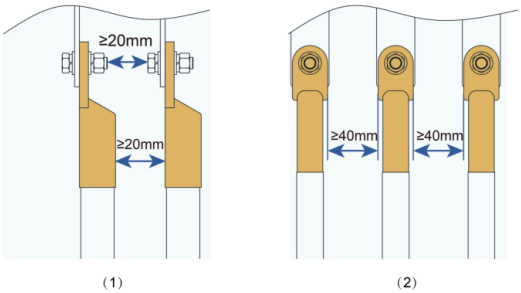

Figure 5-5 Single splicing cable wiring distance

The following figure (1) shows the spacing between adjacent branches after double splicing cable wiring, and the requirement for three-phase spacing is shown in figure (2).

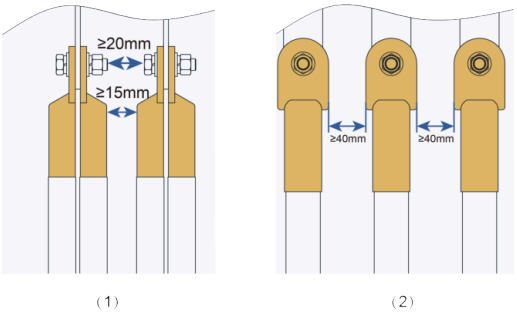

Figure 5-6 Double splicing cable wiring distance

Wiring specifications

1– Single core cable	2– Single core double splicing cable
3– Three-core cable	4– Three-core double splicing cable

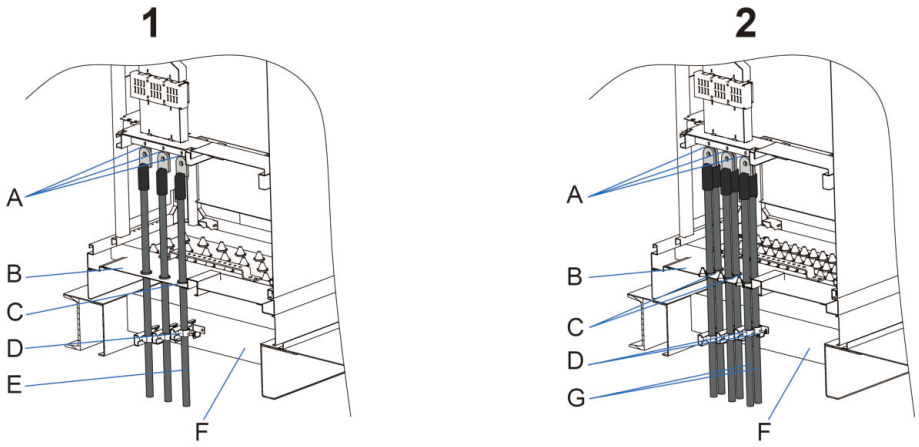

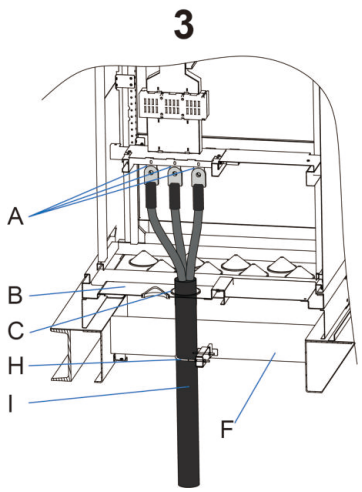

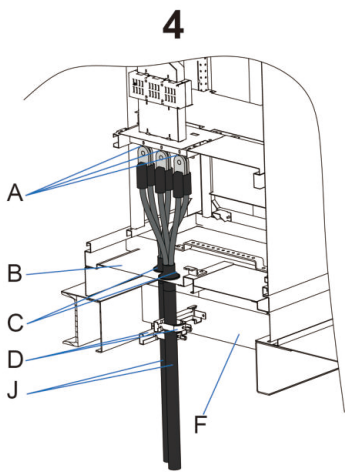

No.	Name
A	Wiring copper bar
B	Low voltage incoming line sealing plate
C	Tower type protective coil
D	Cable clamp
E	Single core cable
F	Container base
G	Single core double splicing cable
H	U-shaped cable clamp
I	Three core cable
J	Three core double splicing cable

⚠ WARNING

- **Incorrect connection sequence may cause fire. Pay maximum attention to the connection sequence.**
- **Ensure the firmness of the cable connection. Poor connection or oxidation of the surface may cause over-heating or fire.**
- **During the wiring process, brute force operation is not allowed, and insulation protection should be taken to ensure that the safety regulations meet the requirements.**
- **Backfilling should be carried out after the low-voltage cable wiring is completed.**

NOTICE

- **Long bolts may affect the insulation and may cause short circuit.**
- **Remove the heat-shrink tubing between the cable lug and the copper bar if necessary. Poor contact or over-heating may follow if otherwise.**
- **Low voltage incoming cables shall be Class A insulated cables.**
- **Low voltage incoming cables need to pass through cable clamps, tower type protective coils, and connect to wiring terminals from the bottom.**
- **Foundation design needs to consider sufficient space for low-voltage cable trenches. Ensure that operators can enter and secure cable clamps.**

5.5.2 Wiring Step

Step 1 Make sure the upstream inverter is in the OFF position.

Step 2 Make sure the air circut breaker and disconnector are in the OFF position.

Step 3 If a UPS is installed, please power it off.

Step 4 Lead the cable into the wiring area through the inlet hole, and mark the cable phase sequence.

Step 5 Strip the protective layer of the cable to expose the copper core of the wire with strippers.

Step 6 Install the OT/DT terminal to the wire and crimp them with a crimping tool. Install a heat shrink tubing to the terminal and heat it with a heat gun.

a. Put the stripped cable inside the cable lug.

b. Tighten the cable lug with relevant tools. Crimp it at least twice.

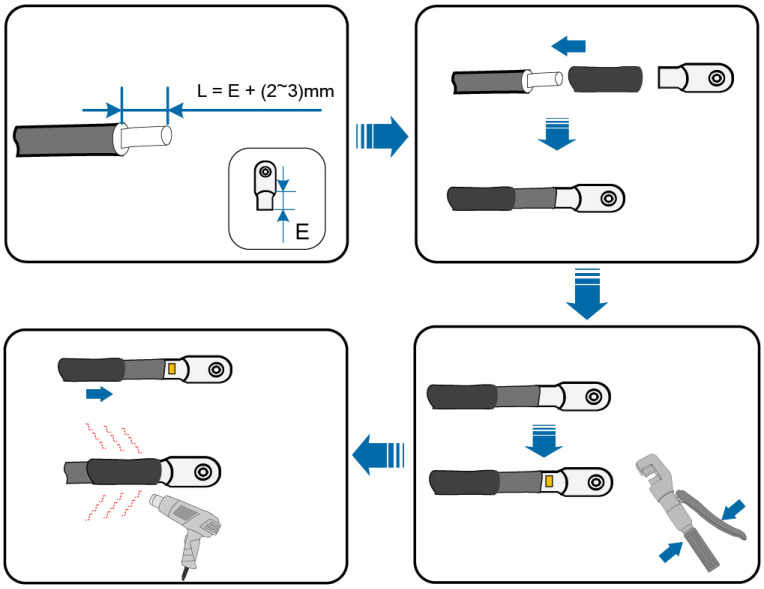

Cable protectors are advisable in the cable crosses if the multi-core cables are used.

Step 7 Connect the cable.

a. Select bolts matching with the cable lug.

b. Attach the cable lug to the connection copper bar.

- If copper wires are used, connect the spare parts as described below:

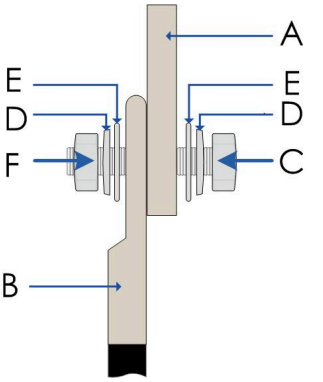

Figure 5-7 Single Side Copper Wire Connection

No.	Name	No.	Name
A	Copper bus	D	M12 Spring washer
B	Cable lug	E	M12 Flat washer
C	M12×40 Bolt	F	M12 Nut

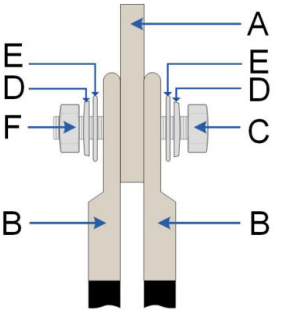

Figure 5-8 Double Side Copper Wire Connection

No.	Name	No.	Name
A	Copper bus	D	M12 Spring washer

No.	Name	No.	Name
B	Cable lug	E	M12 Flat washer
C	M12×45 Bolt	F	M12 Nut

- If aluminum wire is selected, a copper-aluminum adapter terminal is required, as shown below:

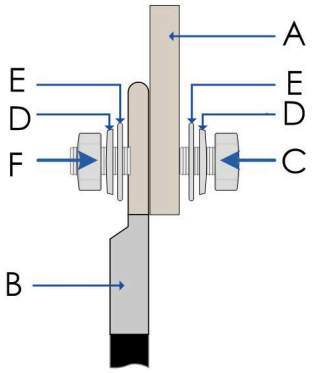

Figure 5-9 Single Side Aluminum Wire Connection

No.	Name	No.	Name
A	Copper bus	D	M12 Spring washer
B	Copper-aluminum adapter terminal	E	M12 Flat washer
C	M12×40 Bolt	F	M12 Nut

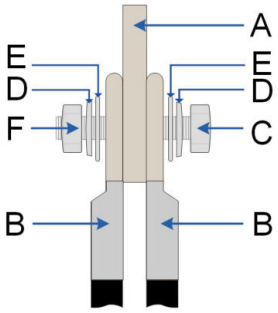

Figure 5-10 Double Side Aluminum Wire Connection

No.	Name	No.	Name
A	Copper bus	D	M12 Spring washer
B	Copper-aluminum adapter terminal	E	M12 Flat washer
C	M12×45 Bolt	F	M12 Nut

NOTICE

If aluminum cables are used, use copper to aluminum adapter terminals to ensure that the aluminum conductors do not come into direct contact with the copper bars.

The bolt layout for the single-side cable is as shown below.

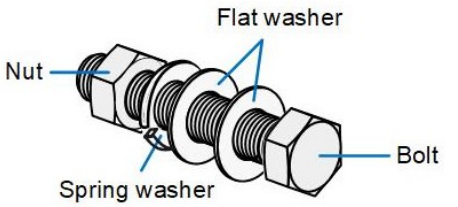

The bolt layout for the double-side cable is as shown below.

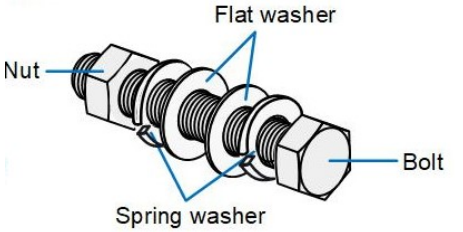

c. Fasten the bolts with screwdriver or spanner. For the M12 bolts, the fastening torque is 60~70N.m.

Step 8 Confirm that all cable connections are secure.

--End

5.5.3 Secure Cables

After completing the LV cable connection, secure the cable properly, to avoid damages caused to the copper bar by stress.

- Secure the single-core cable

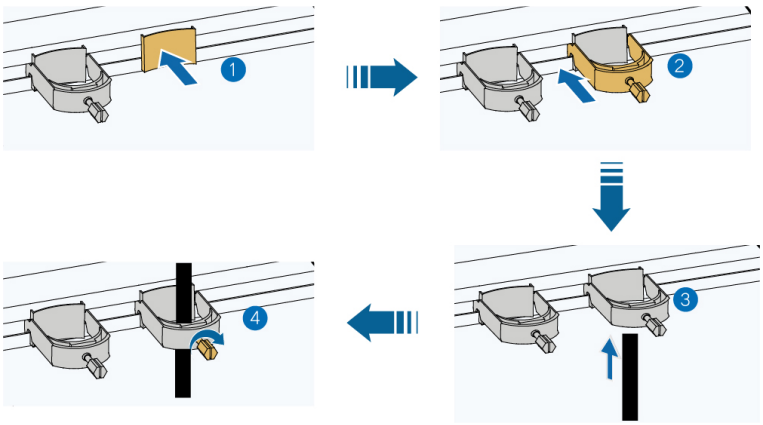

- Secure the multi-core cable

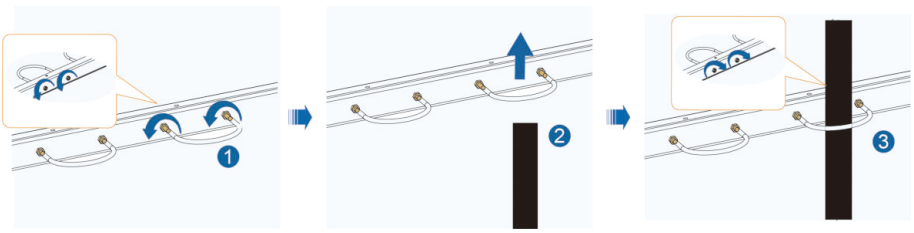

Using fireproof materials to seal the bottom cable entry hole, remove the debris inside the cabinet, and restore the cabinet cover.

5.6 MV Side Connection

5.6.1 Inspection Before Wiring

Terminals connecting the external devices on the MV side of the MV Station are located on the MV switchgear. Before wiring, check and confirm:

- The inverter side should be turned off.
- The low-voltage side frame circuit breaker should be disconnected.
- If a UPS is installed, please power it off.

5.6.2 Procedure

Step 1 Lead the cable from external device through the cable entry on the bottom of the cable compartment.

Step 2 Prepare the terminals and install them tightly, where reference can be made to the cable connector installation manual.

The wiring terminal can be connected with either copper cable or aluminium cable.

- In case of copper cable, use copper wiring terminals.
- In case of aluminium cable, use copper-to-aluminium adapter terminals.

The HV wiring terminal can be connected to a maximum of two cables. Select the terminal as needed.

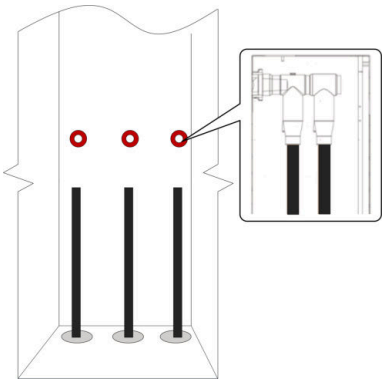

--End

Further Operations

Seal the bottom cable entries with fire-proof mud, clear sundries inside the cabinet, and reassemble the sealing plate of the cabinet.

Should there be any unused wiring terminals, block them with insulating caps.

NOTICE

On-site wiring should be performed based on the actual conditions, in compliance with the MV switchgear manual.

NOTICE

Ensure correct phase sequence during cable connection.

5.6.3 Securing MV Cable

After completing the wiring on the MV side according to the relevant requirements, secure the cables to prevent them from slipping due to stress.

Single-core or three-core cables may be used in the switchgear. Secure them in different ways, as shown below.

Single-core cables

If single-core cables are used, secure the three phase cables using cable clips, as shown in the figure below.

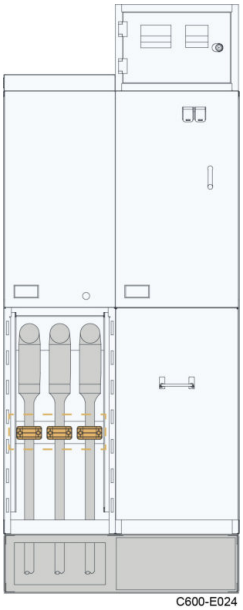

Figure 5-11 Securing single-core cables

Three-core cable

If a three-core cable is used:

- Inside switchgear: The phase B cable must be secured with a cable clip.
- Switchgear base: Add a cable clip under the three-branch breakout boot to secure it. Rubber or other insulating materials can be used to fill the gap to enhance friction.

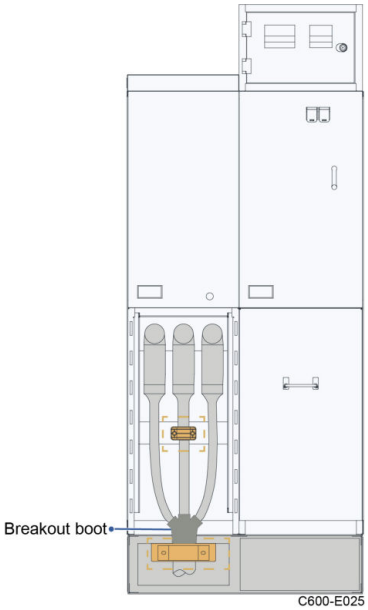

Figure 5-12 Securing a three-core cable

* The switchgear in the figures are for reference only and may differ from the real product.

5.7 Communication Distribution Panel Connection

he communication and distribution area is shown in the following figure. Connect cables according to on-site requirements.

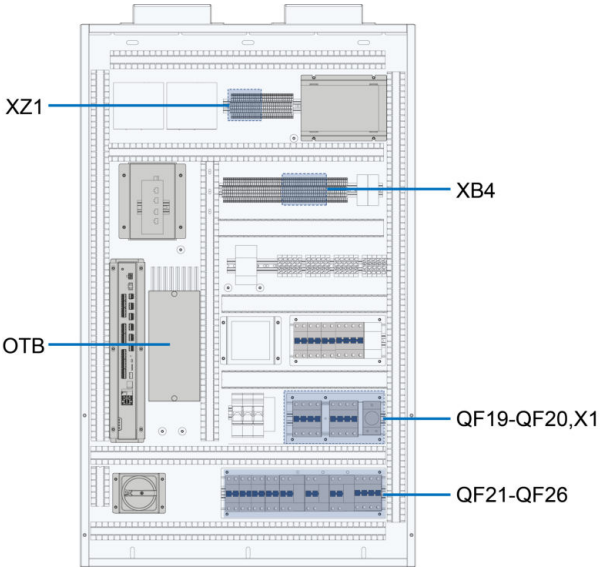

The figure above is indicative only, and actual product may differ.

No.	Description
QF19	Reserved for 400Vac power supply
QF20	Reserved for 400Vac power supply
QF21- QF26	Reserved for 230Vac power supply
OTB	Reserved fiber optic wiring port
X1	Socket
XZ1	Reserve RS485 communication
XB4	Reserve 24Vdc power supply

Wiring diagram

The wiring diagram of external power supply is shown in the figure below. Perform cable connection according to this diagram.

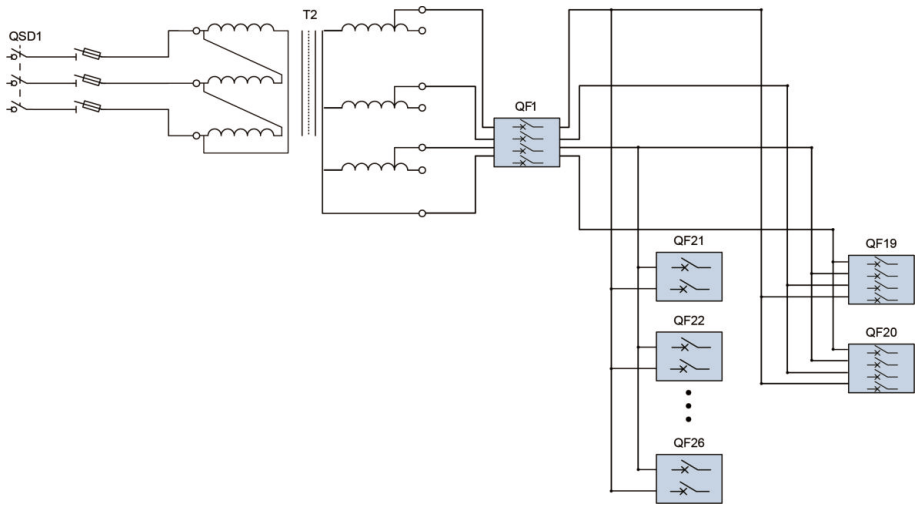

5.8 PLC Communication Connection(Optional)

The inverter and communication distribution panel have built-in PLC communication modules, enabling MVS to support PLC communication.

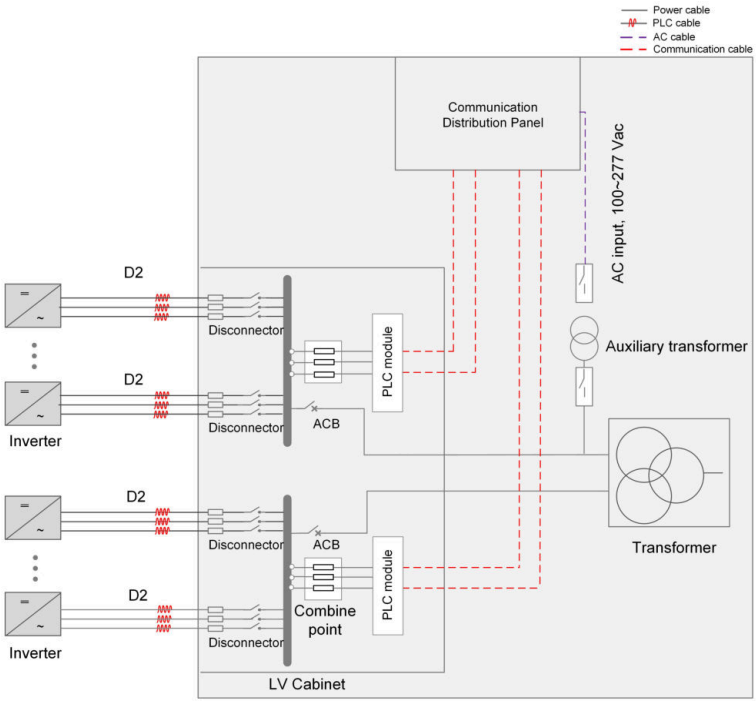

Figure 5-13 PLC wiring diagram

Description of parameters in the diagrams is listed in the table below.

Table 5-4

Parameter	Description	Cable Specification
D2	Length of PLC cable from MVS to inverter	• If using multicore AC cable, the length should be ≤990m. • If using single-core AC cable,the single-core cable length should be ≤790m. • If using parallel-pair cables, the length requirements are the same as above.

Requirements for PLC wiring from MVS to inverter

General requirements

The cable connecting the box-type transformer and the inverter can be a multicore AC cable, single-core AC cable, or parallel-pair cables, depending on the specific requirements of the project.

> To ensure communication quality, the use of multicore cables is recommended.

- The cable should be laid in cable trenches, cable ducts, or conduits.
- The cables should be laid parallel without any knots or twists.

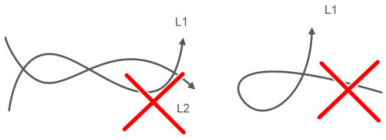

- For three-phase single-core cables, they should be fixed every 1 meter and arranged in a "triangular" shape.

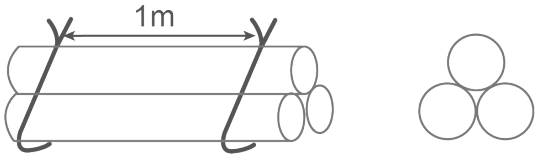

> In this scenario, the cables are not easily bent. It is recommended to tie them separately at positions 10cm before and after the bend.
>
> 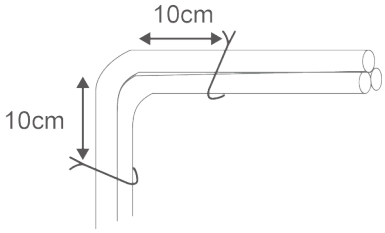
>

- If the single-core cables exceed 400 meters, log into the Web UI of Logger4000, on the **MPLC** page, set the PLC master node's frequency to **Band2** or **Band3**.

Requirements for parallel-pair cables

When using parallel-pair cables, to ensure MPLC communication quality, the length difference between the two sets of cables must not exceed 5 meters. For single-core parallel-pair, the requirements for both sets of cables and the frequency band settings are the same as mentioned above.

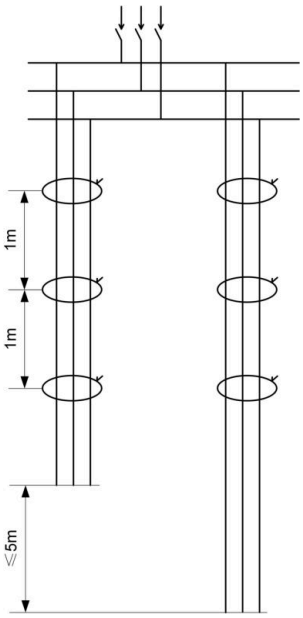

Figure 5-14 Parallel-pair cables layout

PLC cable installation requirements

- The distance between low-voltage AC cables and medium-voltage AC cables should meet the following requirements:
  - Maintain a minimum horizontal distance of 0.5m between low-voltage AC cables and medium-voltage AC cables when laid parallel.

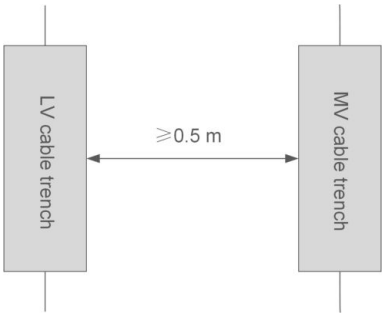

  - If two cables are laid in a crossing manner, the angle of crossing should be between 60° and 120°, and the vertical distance should be no less than 0.5m.

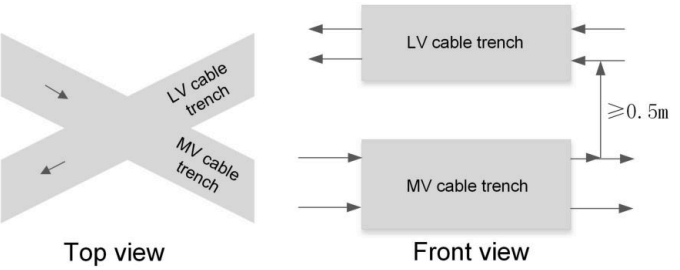

- Only AC cables under the same box-type transformer can be laid in the same cable trench.
- When using different box-type transformers, the distance between the low-voltage side cable trays should meet the following requirements:
  - Maintain a minimum horizontal distance of 0.5m between cable trays from different box-type transformers.

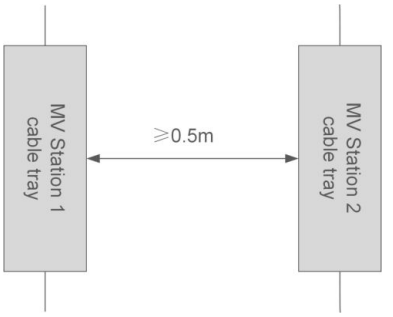

  - If two cables are laid in a crossing manner, the angle of crossing should be between 60° and 120°, and the vertical distance should be no less than 0.5m.

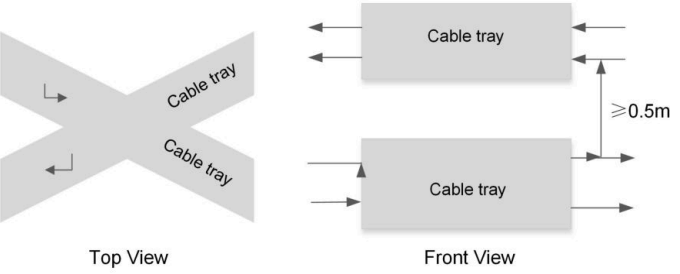

Figure 5-15 Vertical crossing distance between PLC cables

Choose an AC cable equipped with PLC communication, wiring method reference 5.6.2 Procedure.

5.9 Checking after Electrical Connection

Checking Item	Requirement
Equipment appearance	The equipment is intact, and free from rust and paint flake-off. Repaint areas with paint flake-off (if any). The labels on the equipment are legible. The damaged labels must be replaced in time.
Appearance of cable	Cable sheathings are properly wrapped and free from obvious damage. Hoses that contain cables are intact.
Cable connection	Cables are connected in the designed positions. Terminals are prepared as required and securely connected. Labels on both ends of each cable are clear and specific, and attached in the same direction.
Cable routing	Power cables and communication cables must be routed separately. Cables are neat and tidy. The joints of cable ties are evenly cut without burrs. Cables are placed properly and not tense at turning points. Cable routes are straight and smooth, and do not intersect inside a cabinet.
Container	The container is clean and tidy inside, without any unnecessary cables, cable heads, terminals, or tools. No obvious garbage is found outside the equipment. Clean up the dust and sandstorms inside the container.
Others	Check the bottom of the MV Station and seal the gaps between the cables with fireproof mud. If cable glands are used, make sure they are tightened. Seal the unused terminal. Reassemble the protective grid removed. Water-proof processing should be done on the foundation of the MV Station.

6 Powering up and Powering down

NOTICE

The operations described in this chapter must be performed by professional personnel in accordance with local regulations/standards.

6.1 Operation before Power on

6.1.1 Adjusting De-energized Tap Changer

Adjust the output voltage of the transformer. When operating the de-energized tap changer, ensure that the transformer is in a non-excitation state, that is, the high and low voltage sides of the transformer are uncharged.

When the voltage on the LV side remains unchanged, the output voltage on the HV side under different gears is:

Gear	Output Voltage
1 (A)	Standard voltage x 1.05
2 (B)	Standard voltage x 1.025
3 (C)	Standard voltage x 1.0
4 (D)	Standard voltage x 0.975
5 (E)	Standard voltage x 0.95

Take adjusting to gear 1 as an example, operate the de-energized tap changer as follows.

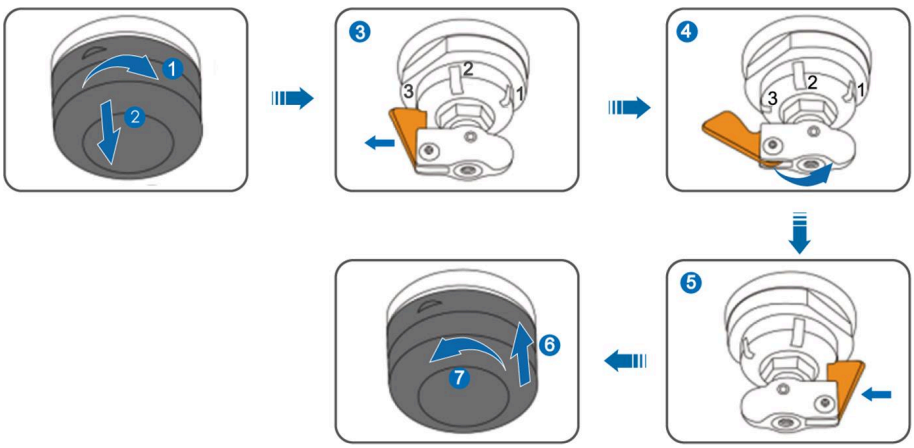

6.1.2 Opening Pressure Relief Valve

The structural design of pressure relief valves may vary across manufacturers, leading to differences in their unlocking mechanisms. The valve can generally be unlocked using one of the following two methods, depending on the specific product:

Remove the Locking Device

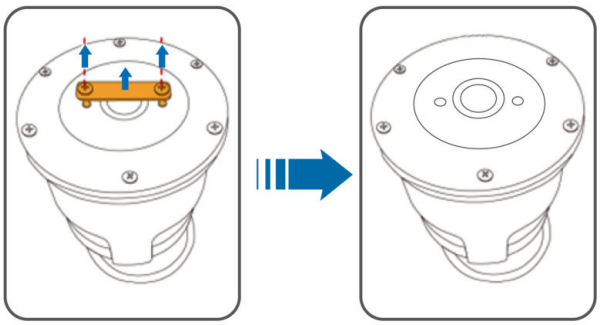

Open the cap A

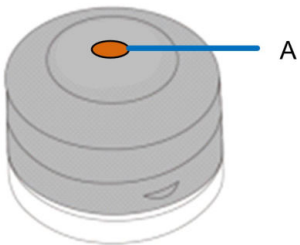

6.1.3 Installing Dehydrating Breather

Step 1 Remove the flange cover at the mounting position for dehydrating breather.

Step 2 Fix the dehydrating breather.

> There is a sealing gasket between the flange cover and the dehydrating breather. When tightening the bolts, make sure that the height of the gasket shrinks by 1/4.

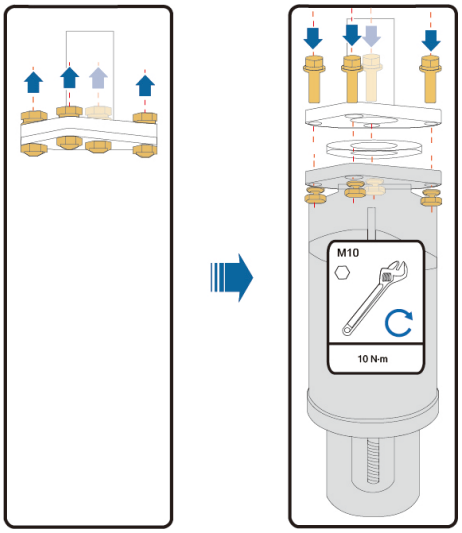

Figure 6-1 Fit the Dehydrating Breather

Step 3 Remove the oil cup from the dehydrating breather.

Step 4 Fill transformer oil into the oil cup. Then, fit the oil cup back to the dehydrating breather.

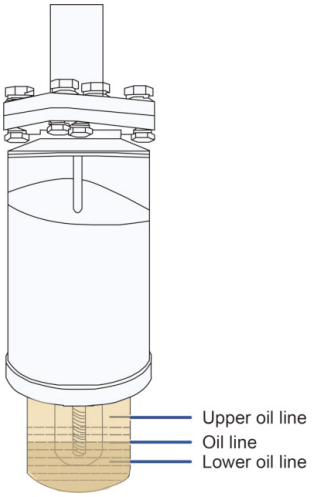

Figure 6-2 Fit the Oil Cup

--End

6.1.4 Installing Surge Arrester (Optional)

The instructions below are provided with the surge arrester of the 36kV MV switchgear as an example. For detailed installation instructions, see the installation guide that comes with the surge arrester.

Step 1 Remove the sealing cap and insulating stopper from the front connector, and unscrew the connecting bolt assembly inside.

Step 2 Fit the connecting rod and then the stud bolt to the front connector.

Step 3 Attach the rear connector with surge arrester to the front connector.

Step 4 Fit the internal connecting bolt assembly, sealing cap, and insulating stopper.

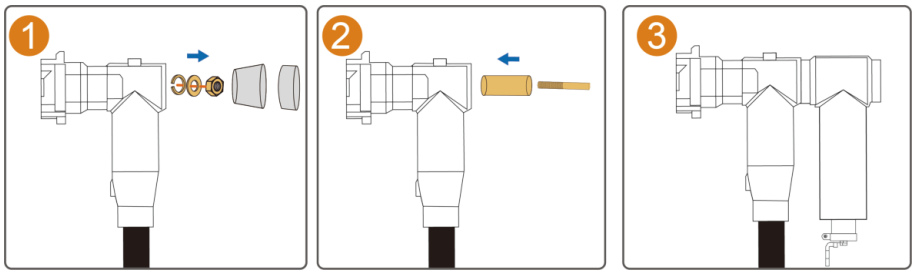

Step 5 Attach the surge arrester's PE wire and copper braid to the grounding wire of the main cable.

--End

NOTICE

If the voltage rating exceeds 36kV, a support plate must be installed under the surge arrester.

6.1.5 Removing Foam Part from Oil Thermometer

Remove the protective cover on the oil thermometer and remove the foam parts in the protective cover before the MV Grid-Connected PV Inverter is officially put into operation.

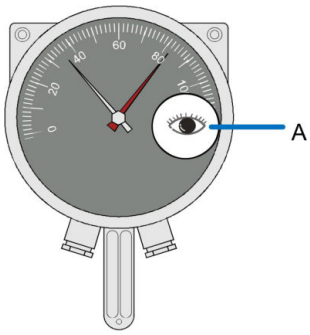

After removal, re-install the protective cover.

6.1.6 Oil Drain

Prerequisite

Location

The oil drain valve is located at the bottom of transformer, the size of the oil drain valve varies by the transformer manufacturers.

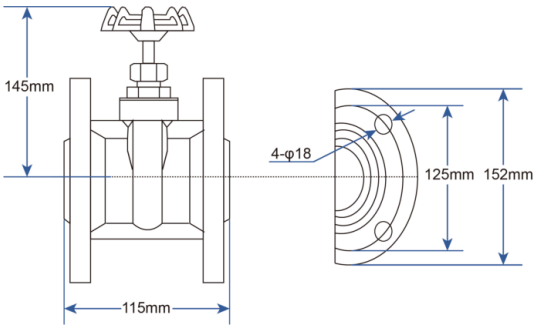

Figure 6-3 MINGYANG

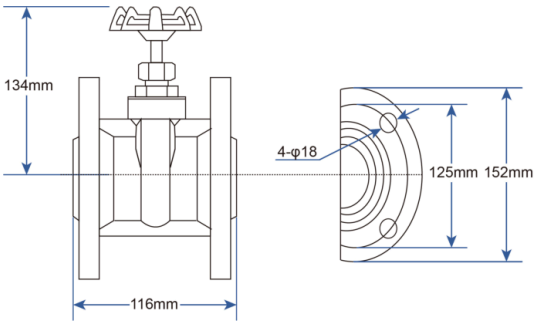

Figure 6-4 Eaglerise

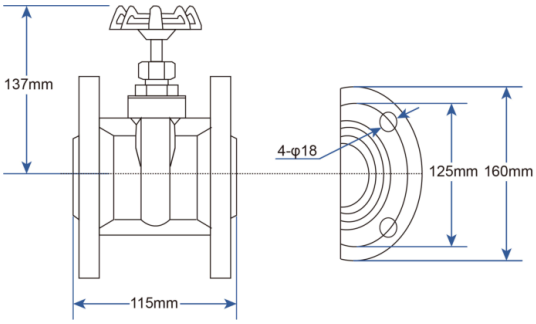

Figure 6-5 HUAPENG

* The figure is for reference only. And the actual product received shall prevail.

Tools Prepration Tools may be used:

No.	Name	Source
1*	Clean steel hose and oil tank	Beyond the scope of delivery
2	Cleaning cloth	
3	Spanner	

No.	Name	Source
4	300mmx38mm adjustable spanner	
5	Drain hose connector	
6	Pipe clip	

*The oil tank capacity of the transformer must be greater than Nx200L, where N is determined according to the amount of the oil needed to be released.

Operations

Step 1 Remove cover plate of drain valve.

Step 2 Fix the drain hose connector. Connect one end of the steel hose to the drain valve and the other end to the tank of the transformer.

Step 3 Open the oil drain valve, and the transformer oil flows slowly into the oil tank.

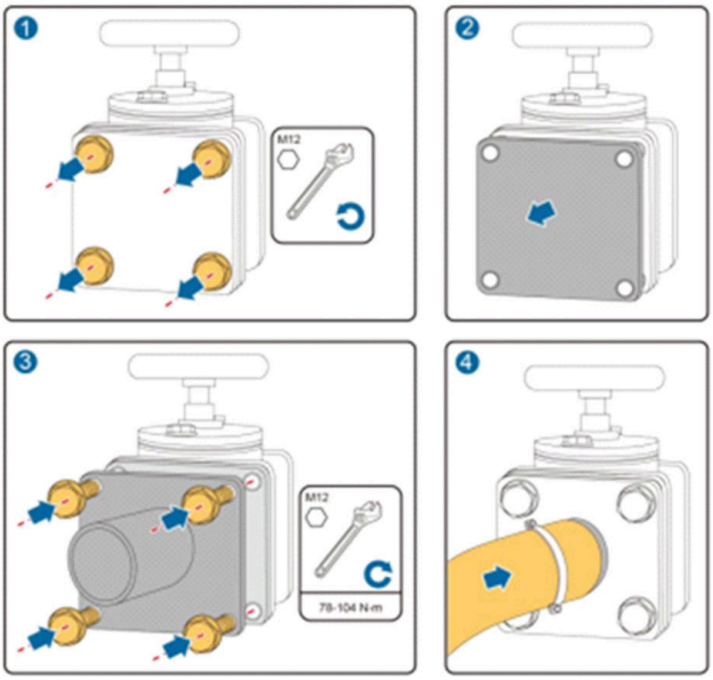

Step 4 When no transformer oil flows out, stop discharging oil.

Step 5 Close the drain valve and remove the drain hose connector and the hose.

Step 6 Reassemble the cover plate of the drain valve.

--End

6.2 Checking before Power on

6.2.1 MV Station Container

1. The installation conforms to the design requirements.
2. The container is level, and each door can be opened properly.
3. There is no crack, dent, or scratch on the container surface. Repaint areas with paint flake-off (if any).
4. The number and positions of external accessories conform to the enclosed document.
5. All markings are correct, clear, and complete.

6.2.2 MV Switchgear

1. There is no crack, dent, or scratch on the cabinet surface.
2. The SF6 barometer pointer is in the green zone.
3. Apart the grounding wire of the secondary circuit and measure secondary loop to the ground resistance and resistance should be M Ω level. Recover the grounding wire and the resistance shall be 0 Ω.
4. If there is a relay protection tester or current source, check the value settings of the protective device, including the set value, The set value must match that provided by the user.
5. The door is closed.
6. The auxiliary AC power circuit breaker in the cabinet is switched on.
7. The conversion switch is in the remote position.
8. The local operating switch has been padlocked.
9. The load switch is opening and the grounding switch is closing.
10. Remove all foreign matters in the medium-voltage ring main unit, such as tools, installation residual materials, etc.

6.2.3 MV Transformer

1. There is no crack, dent, or scratch on the transformer surface.
2. No oil leakage occurs on the transformer surface.
3. The indication of the oil level gauge of the transformer is in lower position of the normal operating range.
4. The oil temperature indicator of the transformer is close to the ambient temperature.
   a. The cover of the oil temperature meter is installed securely, the surface is clean, and the glass is intact.
   b. The temperature measurement loop is complete and intact.
5. The scale of transformer oil level indicator will show in 4 when temperature is 20℃.
6. The locking device of the pressure release valve has been removed.
7. The tap changer is set according to the requirements of the user. If there is no special requirement, set it to the rated level (level 3).

   a. When setting the level, open the handle. After adjusting the level, close the handle to the slot.
   b. After the check is complete, tighten the protective cover for the level switch.
8. There is no packing residue on the transformer surface, and there is no foreign matter in the transformer room.
9. Check the external air insulation distance. Whether the air insulation distance between different voltage grade bushing and bushing to ground conforms to relevant standard.
10. The oil leak port of the transformer room is not blocked.
11. The screen door of the transformer room is closed and locked.

6.2.4 LV Cabinet

1. Disconnector are turned off.
2. The copper bar is not deformed, and no foreign matter is on the copper bar.
3. Measure the ground resistance of Circuit breaker in and out of the copper bar; in the system that neutral point of the transformer is not grounded, the input & output wiring to grounding resistance should be M Ω level; In the neutral point grounding system, outgoing wiring copper bar resistance shall be M Ω level and phase to phase resistance shall be M Ω level. (need to disconnect the auxiliary circuit breaker, or phase to phase resistance is generally 0 Ω).
4. Measure the fuse resistance. Resistances of three phases shall be small and the value is similar.
5. Lightning protection status indicates green.
6. Pull the current terminal chip to the open position and measure the resistance at both ends of the fracture. The value of three-phase resistance should be small and close. After the measurement, restore the current terminal to the connected position and tighten it. The standby current loop shall be shorted and grounded.
7. Apart the grounding yellow green wire of the secondary circuit and measure secondary loop to the ground resistance and resistance should be M Ω level. Recover the grounding wire and the resistance shall be 0 Ω.
8. The installation bolt of input cable has been tightened, and the cable is not loose after pulling.
9. The cable inlet hole has been sealed.
10. Each component is intact.
11. Clear all foreign matter in the switchgear, such as tools and remaining materials.

6.3 Powering Up Steps

⚠ WARNING

When powering up the MVS, follow the rule of "MV before LV, AC before DC".

⚠ WARNING

Check and confirm that the inverter is not started.

Step 1 Switch on the grid-side switchgear.

Step 2 Turn on the circuit breaker of the MV switchgear V cabinet of the MV Station.

Step 3 Turn on the knob switch QSD1 of the power distribution panel and the miniature circuit breaker of the internal power supply.

Step 4 Turn on the circuit breaker inside the LV cabinet (ACB).

Step 5 Turn on the branch disconnector in the LV cabinet.

Step 6 Start the inverter connected to the MV station.

--End

MV Station completes power on operation.

⚠ WARNING

Before putting the MV Station into loaded operation, keep it running in the noload state for 24 hours and ensure that there is no abnormality.

Operations such as handover test and system energization must be performed by locally qualified electricians according to the national/local standards.

6.4 Powering Down Steps

⚠ WARNING

When powering down the MVS, follow the rule of "LV before MV, DC before AC".

Step 1 Shutdown the inverter connected to the MV station.

Step 2 Turn off the branch disconnector in the LV cabinet.

Step 3 Turn off the air circuit breaker (ACB) inside the LV cabinet.

Step 4 Turn off the knob switch QSD1 of the power distribution panel and the miniature circuit breaker of the internal power supply.

Step 5 Turn off the circuit breaker of the MV switchgear V cabinet.

Step 6 Turn on the grounding switch of the MV switchgear V cabinet.

Step 7 Switch off the grid-side switchgear.

--End

MV Station completes the power outage operation.

NOTICE

If the equipment is equipped with a UPS cabinet, power off the UPS cabinet.

⚠ WARNING

After the MV Station is shut down, wait at least 5 minutes before performing maintenance on it.

7 Troubleshooting

This chapter only lists the common troubleshooting methods on the transformer side. For more specific information, refer to the relevant transformer and switchgear user manual.

Fault	Possible Reason	Measures
Pressure relief trip	1. The internal short circuit of the transformer is faulty.	1. If it is a short circuit fault, take an oil sample for oil sample chromatography to further determine the cause of the fault. It is strictly forbidden to put the transformer into operation before the cause of the fault is not ascertained and the fault has not been resolved. (Note: If it is determined that the internal fault is serious, the inside of the transformer has been damaged, contact Sungrow for replacement.)
	2. The pressure relief valve is faulty.	2. The pressure relief valve elastic element expander internal jam, or the bolt torque of the fastening film is too large, resulting in damage to the film, contact Sungrow Power Co., Ltd. for replacement.
	3. Improper oiling operation before servicing or installing the transformer. If the pressure relief valve on the tank is not opened as required.	3. After power off, open the oil hole to release the pressure inside the tank.
Low oil level trip	1. The secondary circuit causes a false alarm of low oil level.	1. Check the secondary circuit to confirm if it is malfunctioning.
	2. The transformer leaks oil or leaks for a long time. After the oil was drained due to maintenance or test reasons, the	2. Fill the transformer with oil.

Fault	Possible Reason	Measures
	oil was not replenished to the normal oil level in time.	
Oil temperature alarm	1. Transformer overload operation. Overload operation may result in a high oil temperature alarm.	1. Check if the transformer is overloaded.
	2. The heat dissipation channel is blocked.	2. Check the transformer heat dissipation channel for foreign matter jams.
	3. The secondary circuit causes a false alarm.	3. Check the actual oil temperature of the transformer to see if it is a false alarm.
Oil temperature trip	1. The transformer is overloaded.	1. Check if the transformer oil level is too low.
	2. Internal fault of the transformer.	2. Check if the temperature sensor is abnormal.
	3. Transformer secondary circuit failure. Long-term overload operation will cause the transformer temperature to continue to rise, resulting in overcurrent and high voltage tripping.	3. Check the load on the transformer. Check the load through the internal current meter of the low voltage cabinet. If the trip occurs due to an overload, it is recommended to reduce the running load.

8 Routine Maintenance

Due to ambient temperature, humidity, dust, and vibration, the MV Station and the inner components will age and wear. To ensure the system safety and maintain the efficiency of the MV Station, it is necessary to carry out routine and periodic maintenance.

All measures, which can help the MV Station work in good conditions, are within the maintenance scope.

8.1 Safety Instructions

⚠ WARNING

Lethal voltage inside the MV Station!
Wait at least 10 minutes after MV Station stops before opening the cabinet door.
Make sure the device internal is completely voltage free before any work on the MV Station.

⚠ WARNING

Only qualified personnel can perform the work described in this chapter.
Do not leave any screws, washers or other metallic parts inside the MV Station to avoid damages to the MV Station.

⚠ WARNING

Sand and moisture penetration may affect the performance of electric devices inside the MV Station!

- **Do not perform electrical connection in sandy season or when the ambient relative humidity is above 95%.**
- **Perform electrical connection at fine weather days.**

⚠ WARNING

Voltages may still be present on cable connection terminals inside the MV Station even though the switches are disconnected. To avoid electric shock hazard, perform the following operations before starting maintenance work,

- **Disconnect all the switches of the MV Station;**
- **Disconnect the upstream and downstream switches of the MV Station.**

Safety Rules

Respect the following five rules in maintaining or servicing the MV Station to ensure the safety of the maintainer.

- Avoid any accidental re-connections.
- Verify that no voltage or current is present with appropriate measurement instrument.

- Ground and short-circuit whenever necessary.
- Cover possible live parts to avoid accidental contact.
- The escape routes must be kept clear off any obstruction.
- Wait at least 10 minutes after the device stop completely to operate the MV Station inside. Ensure that the MV Station is completely voltage-free.

8.2 Maintenance

8.2.1 Introduction

With IP54 protection degree, the MV Station can be installed outdoors. Harsh environment condition or long-time operation, however, may cause aging and damage to the MV Station. Check and maintain the MV Station periodically and replace the aged components, so as to effectively extend the service life and increase the device performance inside the MV Station.

> Unschedulded maintenance is also required, especially when the system performance is poor.

8.2.2 Maintenance Interval

Maintain the MV Station and internal electric devices periodically to ensure the good performance of the MV Station.

The maintenance interval described in this chapter is indicative only. The actual interval depends on the on-site environment condition. If the MV Station is located in harsh environment places, for example desert arrears, the maintenance interval shall be shortened. Particularly, cleaning and anti-corrosion processing should be performed more frequently.

If the MV Station is located in desert areas, it is advisable to check thoroughly the MV Station inside and outside and clean completely after the sand storm.

Table 8-1 MVS Container Maintenance

Check Item	Check Method	Frequency
Inspect appearance	1. Check the top of the MVS for any flammable materials. 2. Inspect the welding points between the MVS and foundation steel plates for firmness and signs of corrosion. 3. Examine the MVS enclosure for damage, paint peeling, or oxidation.	Once a year

Check Item	Check Method	Frequency
	4. Verify that cabinet doors and locks operate smoothly. Lubricate locks and hinges if necessary. 5. Check whether the sealing strips are fixed properly. Intact sealing strips effectively prevent water ingress into the container. Inspect the strips carefully and replace any damaged ones. 6. Look for signs of small animal activity.	
Check system status and perform cleaning	1. Check the foundation for foreign objects, dust, and dirt. 2. Inspect the wire mesh on the MVS door for dust and dirt; clean if necessary.	Once a year
	1. Check the interior of the MVS for foreign objects, dust, and dirt. Clean dust promptly if necessary. 2. Check whether the MVS air inlet and outlet are blocked. 3. Inspect the interior of the MVS for fallen screws. 4. Check the interior of the MVS for signs of water ingress.	Once every six months
Inspect cable connections	1. Check whether all cable inlet and outlet holes of the MVS are properly sealed. 2. Check whether the HV cable has any damage. 3. Check whether the metal hose is damaged.	Once a year
Inspect grounding and equipotential connection	1. Check whether the grounding connection is correct. The grounding resistance must not exceed 1 Ω. 2. Check whether the internal equipotential connection is correct. 3. Check whether the cable shielding layer and the insulation sleeve are in good contact and whether the grounding flat steel is securely fixed.	Once a year
Inspect device maintenance	1. Check whether the UPS indicator lights operate properly and whether any alarms are displayed. 2. Check the UPS battery for any signs of leakage or deformation.	Once every six months

Check Item	Check Method	Frequency
	3. Identify any UPSs that are not in service, and ensure they are charged every six months.	
	1. Check the cleanliness of components, including temperature control switches, humidity control switches, AC contactors, limit switches, smoke detectors, fan heaters, audible and visual alarms, and axial fans. 2. Measure the temperature of cooling fans and inspect for dust. Clean the cooling modules with a vacuum cleaner if necessary. 3. Inspect all metal components for signs of rust on a routine basis. 4. Perform annual contactor inspection to ensure proper mechanical operation. 5. Confirm that the cooling fan modules operate normally, remain unblocked, and produce no abnormal noise. Clean the cooling modules with a vacuum cleaner if necessary.	Once every six months
	1. Inspect the oil-water separator enclosure for cracks or deformation, examine the filter for damage, swelling, or severe discoloration, and check the connection points for oil stains or leakage. 2、Check the sealing strip on the integrated oil pan baffle for any damage.	Once a year
Check functional status	1. Check the configurable parameters in the Web interface. 2. Save operation data, parameters, and logs to the relevant files. 3. Verify that the software is up to date. 4. Check the emergency stop button to ensure it functions correctly. 5. Check whether the warning signs and other device markings are clear and intact. Replace any markings that are blurry or damaged promptly.	Once a year

Table 8-2 LV Cabinet Maintenance

Check Item	Check Method	Frequency
Inspect appearance	1. Examine the LV cabinet enclosure for damage, paint peeling, or oxidation. 2. Verify that cabinet doors and locks operate smoothly. Lubricate locks and hinges if necessary. 3. Check whether the sealing strips are fixed properly. Intact sealing strips effectively prevent water ingress into the cabinet. Inspect the strips carefully and replace any damaged ones.	Once a year
Check system status and perform cleaning	1. Check the interior of the LV cabinet for foreign objects, dust, and dirt. Clean dust promptly if necessary. 2. Check the LV cabinet air inlet and outlet for blockages. 3. Inspect the interior of the LV cabinet for fallen screws. 4. Check the interior of the LV cabinet for signs of water ingress.	Once every six months
	1. Check the internal devices of the LV cabinet for deformation and damage. 2. Check whether the internal devices make abnormal noises during operation. 3. Check the internal and enclosure temperature of the LV cabinet for overheating. 4. Check the internal humidity of the LV cabinet to ensure it is within the normal range. 5. Check whether there is oxidation or rust inside the LV cabinet.	Once a year
Inspect cable connections	1. Check that cable routing is proper and that no anomalies, such as short circuits, are present. In case of anything abnormal, take corrective measures immediately. 2. Check whether all cable inlet and outlet holes of the LV cabinet are properly sealed. 3. Check that LV cabinet cable ties are securely fastened and that cables are not sagging. 4. Inspect the cables for damage, especially the part in contact with the metal enclosure. 5. Check whether the insulating tapes wrapped around the cable terminals have peeled off.	Once a year

Check Item	Check Method	Frequency
	6. Inspect the connection points of the main circuit, including copper bars to copper bars, copper bars to wires, and copper bars to circuit breakers, for signs of melting, darkening, discoloration, or looseness. 7. Inspect the connection points of control wires to devices for melting, darkening, discoloration, or looseness.	
Inspect grounding and equipotential connection	1. Check whether the grounding connection is correct. The grounding resistance must not exceed 1 Ω. 2. Check whether the internal equipotential connection is correct. 3. Check whether the cable shielding layer and the insulation sleeve are in good contact and whether the grounding flat steel is securely fixed.	Once a year
Inspect device maintenance	1. Check whether the circuit board and other components are all clean. 2. Check the fan for dust. Clean using an anti-static vacuum cleaner if necessary. 3. Check the temperature of the LV cabinet. 4. Inspect all metal components for signs of rust on a routine basis. 5. Test circuit breakers, AC load switches, and fuse switches to ensure proper mechanical operation. 6. Confirm that the the LV cabinet fans operate normally, remain unblocked, and produce no abnormal noise. 7. Verify that the LV cabinet meters are functioning correctly.	Once every six months
	1. Check the SPDs and fuses for integrity and functionality. Replace any damaged SPDs or fuses promptly. 2. Check the main circuit fuses for integrity. 3. Check the cleanliness of components, including temperature control switches, humidity control switches, AC contactors, limit switches, smoke detectors, fan heaters, and fans. 4. Check that limit switches are functioning correctly.	Once a year

Check Item	Check Method	Frequency
Check functional status	1. Check the configurable parameters on the Web. 2. Check whether the warning signs and other device markings are clear and intact. Replace any markings that are blurry or damaged promptly. 3. Check the voltage presence indicator lights for any anomalies. 4. Check that the cabinet door button switches and universal transfer switches are functioning correctly. 5. Verify that the LV cabinet circuit breakers can be opened.	Once a year

Table 8-3 Transformer Maintenance

Check Item	Check Method	Frequency
Inspect appearance	1. Check the bolts connecting the cabinet to the base plate for firmness and signs of rust. 2. Examine the enclosure for damage, paint peeling, or oxidation. 3. Verify that cabinet doors and locks operate smoothly. Lubricate locks and hinges if necessary. 4. Check whether the sealing strips are fixed properly. Intact sealing strips effectively prevent water ingress into the cabinet. Inspect the strips carefully and replace any damaged ones. 5. Inspect the transformer secondary wires and hoses for any damage.	Once a year
Check system status and perform cleaning	1. Check for oil leakage of the transformer. 2. Check that the oil level gauge is functioning properly. 3. Check if the operating temperature is within the normal range. 4. Check if the operating noise is within the normal range. 5. Check for external corrosion. 6. Check the main components of the transformer. 7. Check that the transformer breather/ dehumidifier are functioning properly.	Once a year

Check Item	Check Method	Frequency
Inspect cable connections	1. Check all electrical connections and their fasteners, and tighten them to the specified torque. 2. Check that all cable clips, which support the cables, are securely fastened. 3. Inspect HV sleeves for cracking or oil leakage. 4. Check that HV cable outlets are properly sealed. 5. Check whether the transformer cover is tightly closed.	Once a year
Transformer protection	1. Check the Web interface to see if any alarms have been triggered for devices such as the pressure relief valve, temperature gauges, or gas relay. 2. Check that the gauges on the pressure relief valve, temperature gauges, gas relay and other components are showing values within the normal range. 3. Check that the oil temperature and oil level on the instrument panel comply with the oil level curve. 4. Inspect the transformer breather for any discoloration.	Once a year
Grounding status	Please engage a third-party professional testing agency to perform the test.	Once a year
Node signal	Check that all node signals of the transformer, including alarms and trip signals are correct.	Once a year
Transformer oil	Transformer oil chemical analysis.	Once a year

Table 8-4 RMU Maintenance

Check Item	Check Method	Frequency
Inspect appearance	After powering down, check for internal dust accumulation and look for any signs of wet spots or condensation.	Once a year
Inspect cable connections	1. Check that the RMU grounding is in good condition and securely connected.	Once a year

Check Item	Check Method	Frequency
	2. Check the HV cables and their terminals for any signs of aging, damage, slipping, darkening, twisting, discharge marks, or unusual noise. 3. Check that the power supply for the HV switch operating mechanism is normal. 4. Check the fasteners of all electrical connections, and tighten them to the specified torque. 5. Check the condition of the contacts. 6. Check the secondary wiring inside the RMU secondary compartment for any anomalies.	
Inspect device maintenance	1. Confirm that all indicators and signals are normal. 2. Lubricate the drive components. 3. Ensure all components are intact with no visible discharge marks or damage and no signs of overheating at connection points. Replace any non-compliant components. 4. Verify that the mechanical parts of the isolating switch, including the body, the linkage rods, and the operating shaft, show no deformation. Confirm that all components are properly connected and correctly positioned. 5. Ensure the error prevention lock mechanisms of the isolating switch are functioning properly, and ensure that both the electromagnetic lock and the mechanical lock are free of damage.	Once a year
Check the switches	View system status: 1. Check that the RMU circuit breaker can be opened. 2. Check that the RMU disconnector can be opened. 3. Check that the RMU grounding switch can be closed.	Once a year
Check the protective relay (Optional).	Verify that the real-time data displayed on the relay protection device is normal.	Once a year
Check the cleanliness of air Inlets and	Check that the air inlet and outlet of the outdoor RMU are free of dust.	Once every six months

Check Item	Check Method	Frequency
outlets (for outdoor RMUs)		
Outdoor RMU node signal	Check that alarm and trip signals of the RMU are correct.	Once a year

Table 8-5 Power Distribution Room Maintenance

Check Item	Check Method	Frequency
Inspect appearance	1. Check the connection points between the auxiliary transformer and the base plate for firmness and signs of rust. 2. Check whether the warning signs and other device markings are clear and intact. Replace any markings that are blurry or damaged promptly. 3. Check indoor structural components for damage, paint peeling, or oxidation. 4. Look for signs of small animal activity.	Once a year
Check system status and perform cleaning	1. Check the air outlet filter on the container door for dust or dirt, and clean or replace it if necessary. 2. Check the interior for foreign objects, dust, and dirt. Clean dust promptly if necessary. 3. Inspect the interior for fallen screws. 4. Check the interior for signs of water ingress.	Once every six months
	1. Check the internal devices for deformation and damage. 2. Check whether the internal devices make abnormal noises during operation. 3. Check the internal temperature for overheating. Verify any anomalies by monitoring the temperature alarm information via the Web. 4. Check the internal humidity to ensure it is within the normal range. 5. Inspect the interior for signs of oxidation or rust.	Once a year
Inspect cable connections	1. Check cable connections for looseness and tighten them to the specified torque. 2. Inspect the cables for damage, especially the part in contact with the metal enclosure.	Once a year

Check Item	Check Method	Frequency
	3. Check that cable routing is proper and that no anomalies, such as short circuits, are present. In case of anything abnormal, take corrective measures immediately. 4. Check whether the insulating tapes wrapped around the cable terminals have peeled off.	
Inspect grounding and equipotential connection	1. Check whether the grounding connection is correct. The grounding resistance must not exceed 1 Ω. 2. Check whether the internal equipotential connection is correct.	Once a year
Inspect device maintenance	1. Check whether any metal components are rusted. 2. Check that the internal switches of the power distribution tray are functioning properly and that their mechanical operation is smooth. Request spare parts for replacement if any issues are found. 3. Verify that the PCB inside the power distribution tray receives normal power supply. 4. Check that the network switch of the power distribution tray is functioning correctly and that the indicator lights are operating normally. 5. Verify that the UPS is operating properly. Request spare parts for replacement if any issues are found. 6. Check that the logger4000 is functioning correctly. 7. Check whether the UPS indicator lights operate properly and whether any alarms are displayed. 8. Check the UPS battery for any signs of leakage or deformation. 9. Identify any UPSs that are not in service, and ensure they are charged every six months.	Once every six months

⚠ WARNING

Increase the maintenance frequency based on the actual site conditions. Immediate cleaning is required when adverse weather such as dust storms occurs on site.

⚠ WARNING

Before performing maintenance, remove the internal protective grid. Make sure to reassembly the grid and fasten all the screws after the maintenance work.
Make sure all bolts are securely fixed.

⚠ WARNING

Repair immediately any anomalies found during routine maintenance. If there are any doubts, contact Sungrow.

8.3 Checking and Cleaning the Filter

It is recommended to clean the filter every six months to one year. If the product works in harsh environments, such as desert areas, the maintenance cycle should be shortened to three months.

8.3.1 Checking and Cleaning the Air Inlets

The maintenance interval should be shortened if the dust deposition is heavy.

Step 1 Push the two spring latches at the same time to the middle of air inlets to take off the shutters.

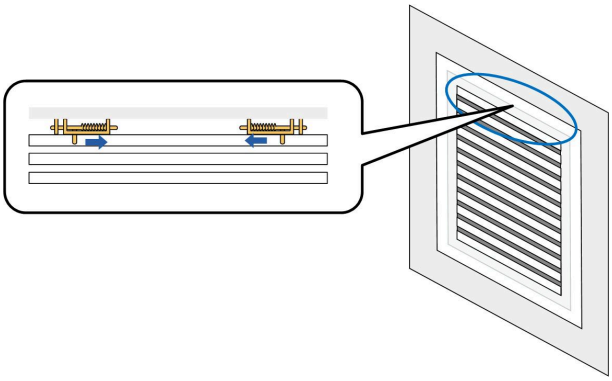

Step 2 Remove the air filter cotton inside the air inlet window, and shake the dust off.

Step 3 Clean the filter screen with warm water and degreaser and then dry it in the air if necessary.

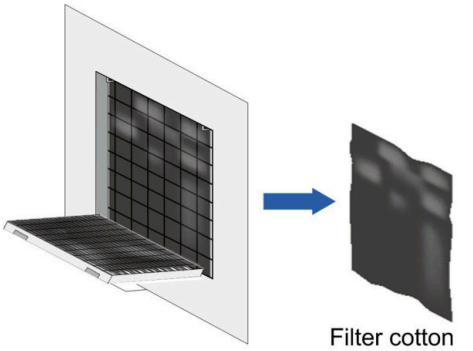

Step 4 If the filter is broken, replace it. Put a proper new one when the old filter is removed.

Step 5 When the filter cotton and screen are clean and dry, reassemble them in reverse order.

--End

> Do not pull hard during cleaning and replacing of the filter cotton and filter screen. The cotton and the screen may be damaged if otherwise.
> Contact Sungrow to order the filter. You can cut proper filters out of the larger filter.

8.3.2 Checking and Cleaning Air inlets of the Heat Exchanger

Step 1 Loosen the air inlet screws of the heat exchanger and remove the air inlet grid cover.

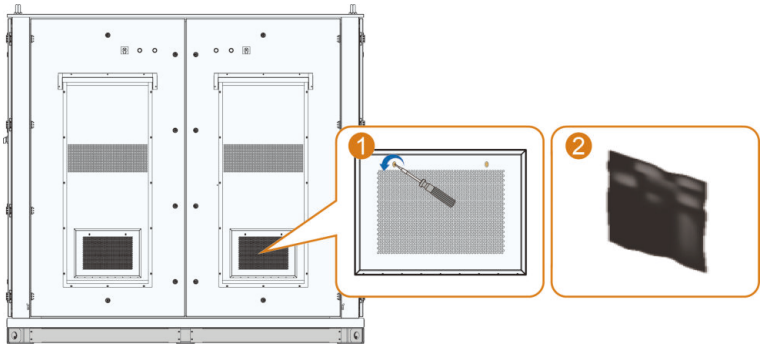

Step 2 Take out the filter cotton and clean it.

Step 3 Reinstall the filter.

Step 4 Restore the grid cover of the air inlet.

--End

8.4 Cleaning the Floor Drain

Step 1 Remove the two M6 fixing bolts on the floor drain.

Step 2 Take out the floor drain. Then, open its cover, and clean the dirt and debris inside.

Step 3 Close the cover, put the floor drain back, and tighten the fixing bolts.

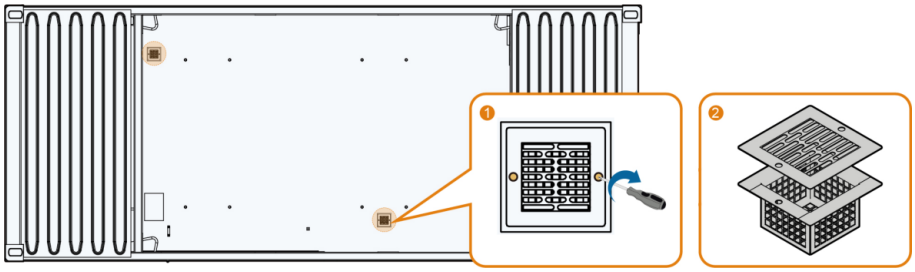

--End

8.5 Appearance Repair

Check if the protective paint sprayed on the enclosure of the product fell off or peeled off. If so, repair it timely.
Spray a special protective paint to the exterior of the product every 5 years.

Solutions

Select different repair solutions based on the damage conditions.

Conditions	Solutions
Surface dirt that can be wiped off	8.5.1 Detergent Cleaning
Finish paint falls off, and the primer is intact	8.5.2 Finish Paint Repair
Primer is damaged, and the base material is exposed	8.5.3 Double-Layer Paint Repair

8.5.1 Detergent Cleaning

Prerequisite

For dust or stains on the product surface, you can wipe them off using water and alcohol.

Prepared by Users

Table 8-6 Cleaning Tools

No.	Item
1	Cleaning cloth
2	Water
3	Alcohol or other non-corrosive detergents

Step 1 Wet the cleaning cloth (or other scrubbing tools) with water, and scrub the dirty parts on the surface.

Step 2 If the dirt cannot be cleaned with water, scrub with 97% alcohol till the surface is acceptable. (Or try to use non-corrosive detergents that are generally used locally.)

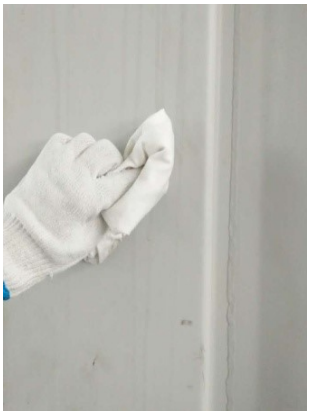

--End

8.5.2 Finish Paint Repair

Prerequisite

For minor scratches or surface paint chalking, where the finish paint has peeled off, but the base material is not exposed, finish paint repair is needed to restore the product appearance.

Finish Paint Selection and Mixing

Table 8-7 Finish Paint Selection and Mixing

Brand and Model	Chemical Component	Mixing Ratio	Thinner	Drying Time (Minimum)
Jotun Finish Coat Hardtop XP or Hardtop XPL	Two-component chemically cured aliphatic	Main component : Hardener= 10:1 (Volume Ratio)	Jotun Thinner No.10	5℃ 24h 10℃ 12h 23℃ 5h 40℃ 3h
AkzoNobel Finish Paint Interthane 990	Two-component acrylic polyurethane paint	Main component : Hardener= 6:1 (Volume Ratio)	International GTA056	5℃ 24h 25℃ 6h 35℃ 4h

- Confirm with SUNGROW before using paints of other brands or models.
- When using a two-component paint, first thoroughly agitate each component individually, and then mix them in the specified proportions for stirring.
- Add the thinner only after the paint and hardener have been mixed.
- Do not use paint that has exceeded its shelf life.

Prepared by Users

Table 8-8 Cleaning Tools

No.	Item
1	400 mesh/600 abrasive paper
2	Cleaning cloth
3	Alcohol
4	Brush
5	Finish paint
6	Film thickness meter

Environment Requirements

- Ambient temperature: 5℃–40℃
- Base material temperature: 5℃–60℃
- Relative humidity: 10%–85%RH

Repair Steps

Step 1 Polish the paint surface with blistering or scratches with an abrasive paper to expose the gray primer. Use a film thickness meter to measure the primer thickness, which must be at least 150μm.

Step 2 Use a clean brush to remove any residue from the surface.

Step 3 Use a piece of clean cloth dipped in alcohol or detergent to remove the surface powder.

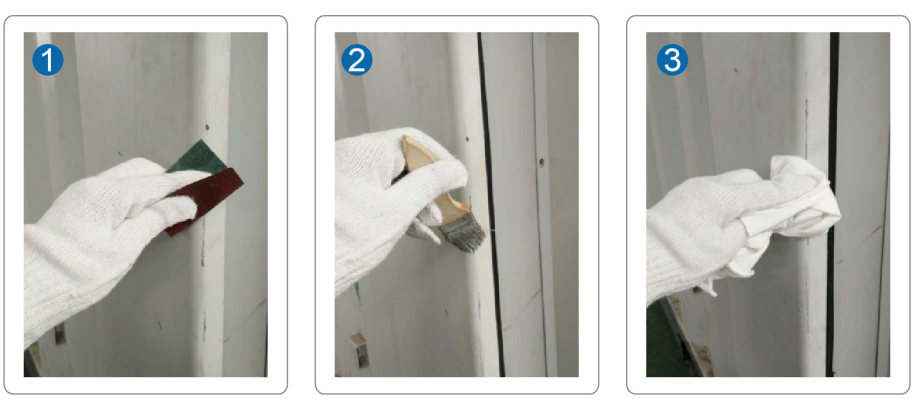

Step 4 Repair the finish paint.

a. Prepare the finish paint with the same color as the appearance.

Common finish paint colors		
RAL7035 (Streamer Grey)	RAL9003 (White)	RAL7016 (Dolphin Grey)

b. Mix the finish paint according to the paint model and the requirements of Table 8-7 Finish Paint Selection and Mixing .

c. Apply the finish paint using a brush in a crosshatch pattern. Once the paint fully dried, measure the film thickness using a film thickness meter. Ensure that the single coat thickness falls between 50μm–100μm.

d. When applying multiple layers of paint, wait for each layer to dry completely before applying the next. The total thickness of the primer and finish paint must be at least 240μm.

Step 5 Inspect the paint to ensure it has a uniform color, smooth transitions, and meets the required film thickness.

--End

8.5.3 Double-Layer Paint Repair

Prerequisite

If the rusted area is large, or there are deep scratches or dents that expose the base material, perform a double-layer paint repair, including both a primer and a finish paint.

Primer and Finish Paint Selection and Mixing

Table 8-9 Primer and Finish Paint Selection and Mixing

Brand and model	Chemical Component	Mixing Ratio	Thinner	Drying Time (Minimum)
Jotun Primer Jotamastic 90	Two-component epoxy paint	Main component : Hardener= 3.5:1 (Volume Ratio)	Jotun Thinner No.17	5℃ 30h 10℃ 10h 23℃ 3h 40℃ 1.5h
AkzoNobel Primer Interseal 670HS	Two-component epoxy paint	Main component : Hardener= 5.67:1 (Volume Ratio)	International GTA220	5℃ 36h 10℃ 16h 25℃ 10h 40℃ 4h
Jotun Finish Coat Hardtop XP or Hardtop XPL	Two-component chemically cured aliphatic	Main component : Hardener= 10:1 (Volume Ratio)	Jotun Thinner No.10	5℃ 24h 10℃ 12h 23℃ 5h 40℃ 3h
AkzoNobel Finish Paint Interthane 990	Two-component acrylic polyurethane paint	Main component : Hardener= 6:1 (Volume Ratio)	International GTA056	5℃ 24h 25℃ 6h 35℃ 4h

- Use primers and finish paints from the same manufacturer.
- Confirm with SUNGROW before using any paint from a different manufacturer.

- When using a two-component paint, first thoroughly agitate each component individually, and then mix them in the specified proportions for stirring.
- Add the thinner only after the paint and hardener have been mixed.
- Do not use paint that has exceeded its shelf life.

Prepared by users

Table 8-10 Cleaning Tools

No.	Item
1	400 mesh/600 mesh abrasive paper
2	Cleaning cloth

No.	Item
3	Alcohol
4	Brushes with different sizes
5	Grinder (conical and cylindrical polishing heads)
6	Wall putty
7	Finish coat
8	Primer
9	Film thickness meter

Environment Requirements

- Ambient temperature: 5℃–40℃
- Base material temperature: 5℃–60℃
- Relative humidity: 10%RH–85%RH

Repair Steps

Step 1 Use a grinder or abrasive paper to smooth uneven areas on the surface, achieving a smooth finish with a metallic luster. Ensure a uniform transition from rusted areas to intact coating.

> Uneven areas refer to burrs, metal fragments, slag, gaps, and sharp edges on the product.

Step 2 For deeper defects such as scratches or dents, repair them with wall putty to ensure a flat surface.

Step 3 Use a clean brush to remove any residue from the surface.

Step 4 Use a piece of clean cloth dipped in alcohol to remove the surface powder.

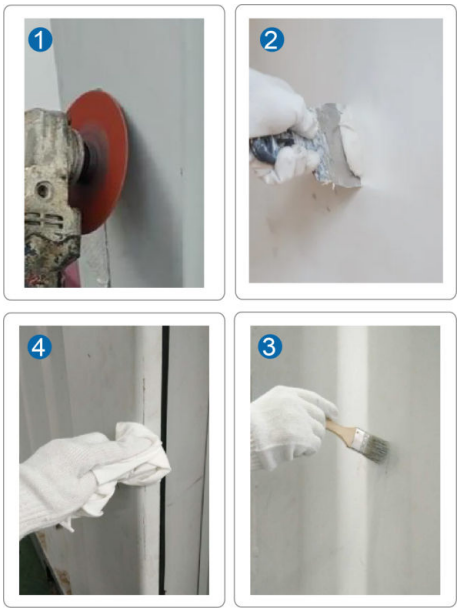

Step 5 Repair the primer.

a. Prepare the primer with the same color as the appearance.

Common finish paint colors		
RAL7035 (Streamer Grey)	RAL9003 (White)	RAL7016 (Dolphin Grey)

b. Mix the primer according to the paint model and the requirements of Table 8-9 Primer and Finish Paint Selection and Mixing .

c. Apply a primer with a small brush, and use a film thickness meter to ensure the coating thickness in corners and gaps is between 70μm–80μm.

d. After the first layer dries, apply another layer of primer using a brush in a crosshatch pattern. Once it is dry, check that the dry film thickness is within 100μm–300μm.

Step 6 Refer to 8.5.2 Finish Paint Repair for finish paint repair.

Step 7 Inspect the paint to ensure it has a uniform color, smooth transitions, and meets the required film thickness.

--End

When using spray paint, follow these steps:

1. Carefully cover the area outside the damaged spot (extending 800mm outward) using masking paper.
2. Spray the exposed area with the paint. After the paint dries, check that the dry film thickness is within the range of 100μm–300μm.

8.6 Replace the Fuse of LV Cabinet

Prerequisite

Overview

The fuse position of LV cabinet is shown in the figure below.

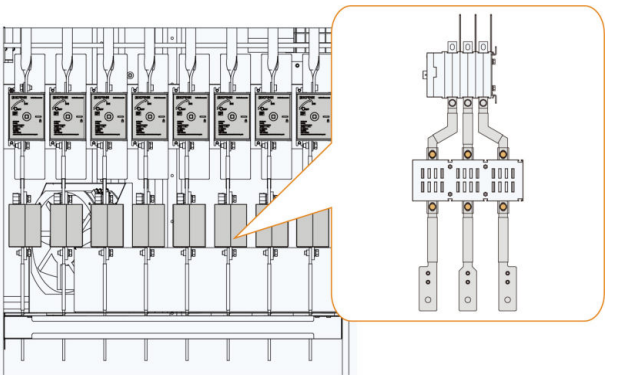

Tools

No.	Name	Source
1	Ratchet wrench	Scope of supply
2	Torque wrench	Beyond the scope of supply
3	Load switch operating handle	
4	New fuse	
5	Screwdriver (M5)	
6	Multimeter	
7	Insulating gloves	
8	safety helmet	
9	Insulated shoes	

Preparations

⚠ WARNING

Check and ensure that the MV Station has been shut down and disconnected from all connected inverters.

- Check and confirm safety helmet, insulating shoes, working clothes and insulating gloves have been worn.
- Open the LV cabinet door, place one side of the door limit bracket in the limit socket to realize the opening limit.
- Check the fuse fault indicator through the transparent window above the fuse box to determine the fault branch.
- Measure with a multimeter to confirm that there is no power in the branch.
- Insert the extension rod into the end of the wrench handle to extend the wrench.

Procedure

Step 1 Remove a total of 6 fixing bolts from the top and bottom of the fuse in turn, slide the fuse box to the right and take it out forward.

Step 2 Remove the fixing bolts (M5) of the fuse box, open the fuse box, and replace the faulty fuse.

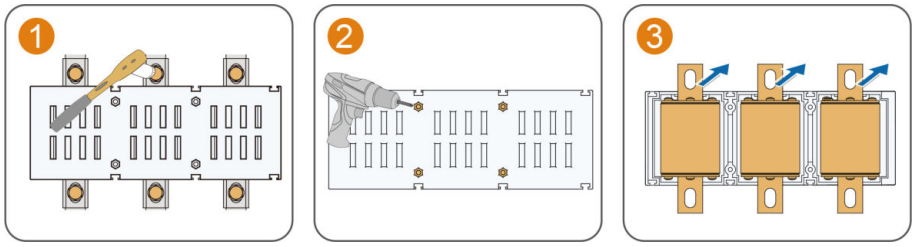

The fuse failure indicator should be facing the transparent window of the fuse box.

Step 3 Close the fuse box and fasten the fixing bolts.

Step 4 Put the fuse box into the maintenance branch from front to back.

Step 5 Tighten 6 fixing bolts on the fuse box. The recommended torque is 25N. m.

Step 6 Close the load switch of the fault branch

Step 7 Place the door limit bracket at the initial position and lock the door.

Step 8 Power on the MV Station again.

--End

8.7 Replace the Fans of LV Cabinet

This section gives instructions on how to replace the fans.

Replace the upper centrifugal fan

1. Open the front door of the LV cabinet, unscrew the eight M5 fixing bolts on the air baffle, and take down the air baffle.
2. Unscrew the four M5 fixing bolts on the fan.
3. Disconnect the wiring terminals, and take out the fan.
4. Install the new fan into the LV cabinet, by completing the above steps in reverse.

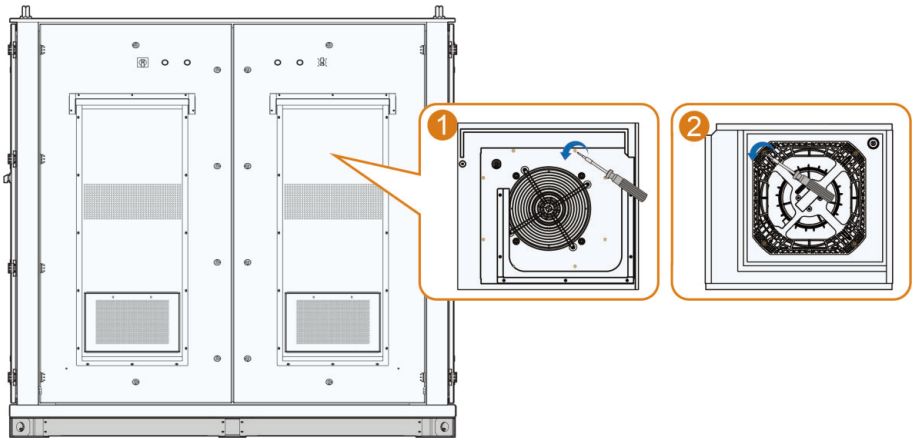

Replace the bottom centrifugal fan

1. Open the front door of the LV cabinet, Unscrew the eight M5 fixing bolts on the lower sealing plate, and take down the lower sealing plate.
2. Unscrew the four M5 fixing bolts on the fan.
3. Disconnect the wiring terminals, and take out the fan.
4. Install the new fan into the LV cabinet, by completing the above steps in reverse.

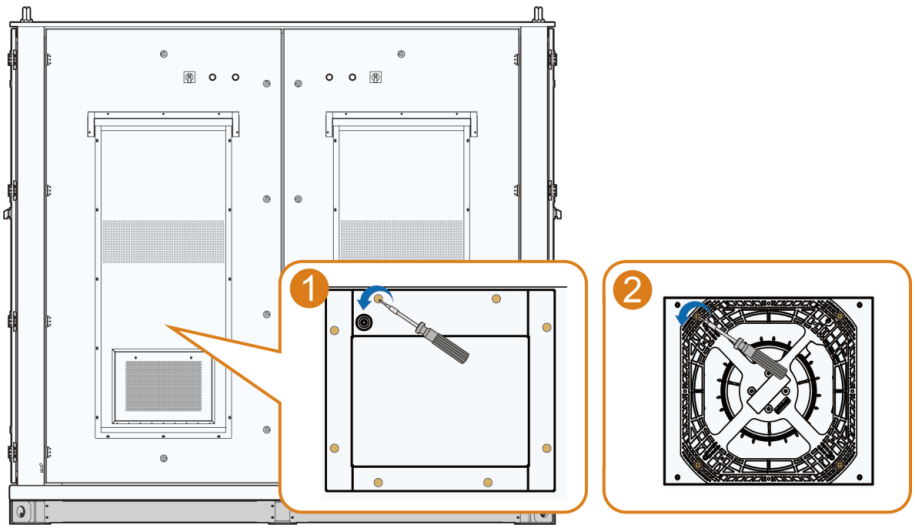

Replace the lower disturbed flow fan

1. Unscrew the twelve M5 fixing bolts on the back panel of the lv cabinet and remove the back panel.

2. Unscrew the four M5 fixing bolts on the fan and disconnect the wiring terminals.
3. Unscrew the fixing bolts of the fan mesh cover and take out the fan.
4. Install the new fan into the LV cabinet, by completing the above steps in reverse.

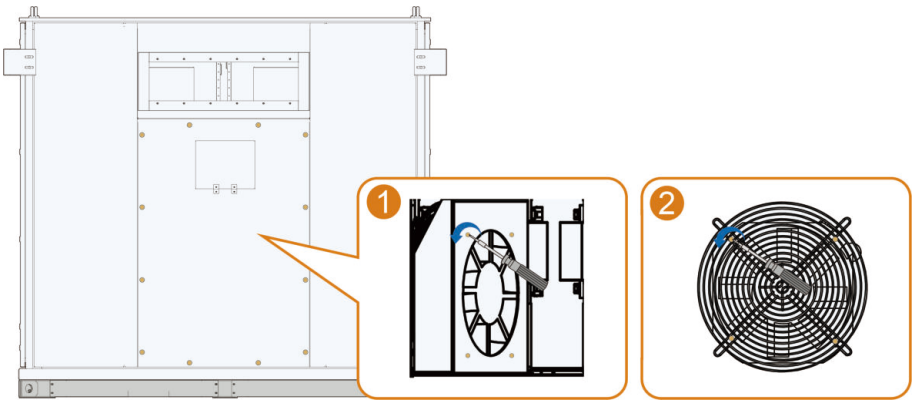

9 Appendix

9.1 Technical Parameters

MVS8960–LV

Transformer	
Transformer type	Oil immersed
Rated power	8960 kVA @ 40 ℃
Max. power	9856 kVA @ 30 ℃
Vector group	Dy11y11
LV / MV voltage	0.8-0.8 kV / (20 – 35) kV[1)]
Maximum input current at nominal voltage	3557 A * 2
Frequency	50 Hz / 60 Hz
Tapping on HV	0, ±2×2.5%
Efficiency	Tier2
Cooling type	ONAN (Oil Natural Air Natural)
Impedance	9.5 % (± 10 %)
Oil type	Mineral oil (PCB free)
Winding material	Al / Al
Insulation class	A
MV Switchgear	
Insulation type	SF6[2)]
Rate voltage	24 kV – 40.5 kV
Rate current	630 A
Internal arcing fault	IAC AFL 20kA/1s
Qty.of feeder	3 feeders
LV Panel	

ACB specification	4000 A / 800 Vac / 3P, 2 pcs
Disconnector specification	260 A / 800 Vac / 3P, 28 pcs
Fuse specification	350A / 800 Vac / 1P, 84 pcs
Protection	
AC input protection	Fuse+Disconnector
Transformer protection	Oil-temperature, oil-level, oil-pressure,Buchholz
Relay protection	50 / 51,50N / 51N
Surge protection	AC Type I + II
General Data	
Dimensions(WxHxD)	6,058x2,896x2,438 mm
Approximate weight	24 T
Operating ambient temperature range[3)]	-30 ℃ ~ +60 ℃[4)]
Auxiliary power supply	5 kVA / 400 V (optional: max. 40 kVA)
Degree of protection	IP54
Allowable relative humidity range (non-condensing)	0 – 95 %
Operating altitude	1000 m (standard) / > 1000 m (optional)
Communication	Standard: RS485, Ethernet; Optional: optical fiber
Compliance	IEC 60076, IEC 62271-200, IEC 62271-202, IEC 61439-1, EN50588-1

1): The LV/MV voltage parameter for Italy is 0.8 - 0.8 kV / (20 – 36) kV.

2): 24kV RMU is SF6-Free.

3): The ambient temperature is determined as the average temperature obtained from at least four evenly distributed temperature monitoring points located at a distance of 1 meter from the equipment, at a height halfway up the machine. The temperature sensors must be shielded from airflow, thermal radiation, and rapid temperature fluctuations to prevent display inaccuracies.

4): When the temperature is below -20℃, optional configuration is required.

MVS9000–LV

Transformer	
Transformer type	Oil immersed
Rated power	9000 kVA @ 51 ℃□9054 kVA @ 50 ℃
Max. power	10560 kVA @ 30 ℃
Vector group	Dy11y11
LV / MV voltage	0.8 – 0.8 kV / 24 – 36 kV
Maximum input current at nominal voltage	3811 A * 2
Frequency	50 Hz / 60 Hz
Tapping on HV	0, ±2×2.5%
Efficiency	Tier2
Cooling type	ONAN (Oil Natural Air Natural)
Impedance	9.5 % (± 10 %)
Oil type	Mineral oil (PCB free)
Winding material	Al / Al
Insulation class	A
MV Switchgear	
Insulation type	SF6[1)]
Rate voltage	24 kV – 36 kV
Rate current	630 A
Internal arcing fault	IAC AFL 20kA/1s
Qty.of feeder	3 feeders
LV Panel	
ACB specification	4000 A / 800 Vac / 3P, 2 pcs
Disconnector specification	260 A / 800 Vac / 3P, 30 pcs
Fuse specification	350 A / 800 Vac / 1P, 90 pcs
Protection	

AC input protection	Fuse+Disconnector
Transformer protection	Oil-temperature, oil-level, oil-pressure
Relay protection	50 / 51,50N / 51N
Surge protection	AC Type I + II
General Data	
Dimensions(WxHxD)	6,058x2,896x2,438 mm
Approximate weight	25 T
Operating ambient temperature range[2)]	-30 ℃ ~ +60 ℃ [3)]
Auxiliary power supply	5 kVA / 400 V (optional: max. 40 kVA)
Degree of protection	IP54
Allowable relative humidity range (non-condensing)	0 – 95 %
Operating altitude	1000 m (standard) / > 1000 m (optional)
Communication	Standard: RS485, Ethernet; Optional: optical fiber
Compliance	IEC 60076, IEC 62271-200, IEC 62271-202, IEC 61439-1, EN50588-1

1): 24kV RMU is SF6-Free.

2): The ambient temperature is determined as the average temperature obtained from at least four evenly distributed temperature monitoring points located at a distance of 1 meter from the equipment, at a height halfway up the machine. The temperature sensors must be shielded from airflow, thermal radiation, and rapid temperature fluctuations to prevent display inaccuracies.

3): When the temperature is below -20℃, optional configuration is required.

9.2 Tightening Torques

To prevent the cable lugs from loosening under mechanical stress, which may cause poor contact or increased contact resistance and result in overheating or even fire, ensure that the following torque requirements are met when tightening the screws securing the cable lugs:

Bolt	Torque(N·m)	Bolt	Torque(N·m)
M3	0.7–1	M8	18–23
M4	1.8–2.4	M10	34–40
M5	4–4.8	M12	60–70
M6	7–8	M16	119–140

*Torque values listed in the table are intended for the bolt and nut assembly, and do not apply to riveted nuts or riveted screws, etc. The torque to be adopted should depend on the actual situation.

**Secure the cable at a proper point to reduce the stress on the cable lug.

9.3 Quality Assurance

When product faults occur during the warranty period, SUNGROW will provide free service or replace the product with a new one.

The software security update period for this product aligns with the warranty period. During the warranty, security patches or updates will be provided if any vulnerabilities or compatibility issues are identified.

Evidence

During the warranty period, the customer shall provide the product purchase invoice and date. In addition, the trademark on the product shall be undamaged and legible. Otherwise, SUNGROW has the right to refuse to honor the quality guarantee.

Conditions

- After replacement, unqualified products shall be processed by SUNGROW.
- The customer shall give SUNGROW a reasonable period to repair the faulty device.

Exclusion of Liability

In the following circumstances, SUNGROW has the right to refuse to honor the quality guarantee:

- The free warranty period for the whole machine/components has expired.
- The device is damaged during transport.
- The device is incorrectly installed, refitted, or used.
- The device operates in harsh conditions beyond those described in this manual.
- The fault or damage is caused by installation, repairs, modification, or disassembly performed by a service provider or personnel not from SUNGROW.
- The fault or damage is caused by the use of non-standard or non-SUNGROW components or software.

- The installation and use range are beyond stipulations of relevant international standards.
- The damage is caused by unexpected natural factors.

For faulty products in any of above cases, if the customer requests maintenance, paid maintenance service may be provided based on the judgment of SUNGROW.

> Product data such as product dimensions are subject to change without prior notice. The latest documentation from SUNGROW should take precedence in case of any deviation.

9.4 Contact Information

In case of questions about this product, please contact us. We need the following information to provide you the best assistance:

- Model of the device
- Serial number of the device
- Fault code/name
- Brief description of the problem

For detailed contact information, please visit: **https://en.SUNGROWpower.com/contactUS**

Sungrow Power Supply Co., Ltd.

www.sungrowpower.com

M-D-000833